26360, 80207 Inline, 3/2 & 5/2 Indirect solenoid actuated spool valves (Low power)





- Port size: G1/4, G1/2
- For single and double operated actuators
- Manual override with and without detent
- Simple design of soft seal spool
- Easily interchangeable solenoid
- Maintenance-free
- All valves available with Ex protected coils (ATEX or other international approvals)

Technical features

Medium:
Compressed air, filtered, lubricated or non-lubricated

Operation:
Indirect solenoid operated T-spool valves

Operating pressure:
10 bar (145 psi), details see table

Orifice:
6 and 12 mm

Port size:
G1/4, G1/2

Flow direction:
Fixed

Mounting: Optional, preferably with solenoid on top

Ambient/Media temperature:
-10° ... +60°C (+14° ... +140°F)
Depending on solenoid system
Air supply must be dry enough to avoid ice formation at temperatures below +2°C (+35°F).

Materials:
Housing: Aluminium anodized
Pilot flange: Plastic (POM)
Seals: NBR

Technical data 3/2 way

Symbol	Port size	Operating pressure (bar) min.	Operating pressure (bar) max.	Flow (l/min)	Switching time (ms)	Manual override with/without detent	Weight without Solenoid (kg)	Dimension No.	Model *1)
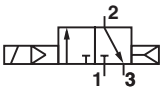	G1/4	1	10	1200	35	–	0,4	1	8020766
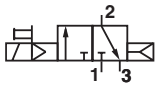	G1/4	1	10	1200	35	without	0,4	1	8020767
	G1/2	1,5	10	3000	35	without	0,7	1	8020867
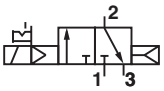	G1/4	1	10	1200	35	with	0,4	1	8020765
	G1/2	1,5	10	3000	35	with	0,7	1	8020865

Technical data 5/2 way

Symbol	Port size	Operating pressure (bar) min.	Operating pressure (bar) max.	Flow (l/min)	Switching time (ms)	Manual override with/without detent	Weight without Solenoid (kg)	Dimension No.	Model *1)
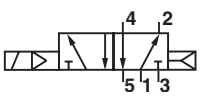	G1/4	1	10	1200	35	–	0,55	2	2636066
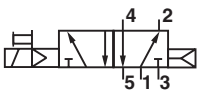	G1/4	1	10	1200	35	without	0,55	3	2636067
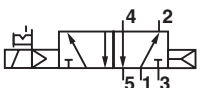	G1/4	1	10	1200	35	with	0,55	3	2636065
	G1/2	2	10	3000	40	with	0,83	4	2637065
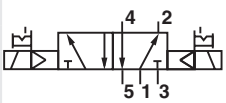	G1/4	1	10	1200	30	with	0,9	5	2636265
	G1/2	2	10	3000	35	with	1,3	6	2637265

*1) When ordering, please indicate solenoid, voltage and current (frequency).

Our policy is one of continued research and development. We therefore reserve the right to amend, without notice, the specifications given in this document. (2001 - 5158i) © 2024 Norgren Ltd.

Solenoid operators

	Power consumption 24 V d.c. (W)	230 V a.c. (VA)	Rated current 24 V d.c. (m A)	230 V a.c. (m A)	Protection class IP/NEMA	Ex-Protection (ATEX-Category)	Temperature Ambient/Media (°C)	Electrical connection	Drawing No.	Circuit diagram No.	Model
	2,7	–	113	–	IP65 (with connector)	–	-25 ... +60 Fluid: max. +80	Connector DIN EN 175301-803 Form A *1)	1	1	0242
	–	4,2	–	18	IP65 (with connector)	–	-25 ... +60 Fluid: max. +80	Connector DIN EN 175301-803 Form A *1)	1	1	0245
	2,7	–	113	–	IP65 (with connector)	II 3G Ex ec IIC T5 Gc II 3D Ex tc IIIB T90°C Dc	-20 ... +60	Special connector DIN EN 175301-803 Form A	1	1	3215
	3,6	–	150	–	IP66	II 2G Ex mb IIC T4 Gb II 2D Ex mb IIIC T115°C Db	-20 ... +70	Cable length 3 m	5	4	0298
	–	5,3	–	18	IP66	II 2G Ex mb IIC T4 Gb II 2D Ex mb IIIC T115°C Db	-20 ... +70	Cable length 3 m	5	4	0299
	3,9	-	162	-	IP66 (with cable gland)	II 2G Ex eb mb IIC T4/ T6 Gb II 2D Ex tb IIIC T130°C Db	T4: -40 ...+80 T6: -40 ... +55 -40 ...+80	M20 x 1,5 *1)	6	4	4210
	-	5,3	-	23	IP66 (with cable gland)	II 2G Ex eb mb IIC T4/ T6 Gb II 2D Ex tb IIIC T130°C Db	T4: -40 ...+80 T6: -40 ... +55 -40 ...+80	M20 x 1,5 *1)	6	7	4211
	3,9	-	162	-	IP66 (with cable gland)	II 2G Ex db mb IIC T4/ T6 Gb II 2G Ex eb mb IIC T4/ T6 Gb II 2D Ex tb IIIC T130°C Db	T4: -40 ...+80 T6: -40 ... +55 -40 ...+80	1/2 NPT *1)	7	20	4610
	-	5,3	-	23	IP66 (with cable gland)	II 2G Ex db mb IIC T4/ T6 Gb II 2G Ex eb mb IIC T4/ T6 Gb II 2D Ex tb IIIC T130°C Db	T4: -40 ...+80 T6: -40 ... +55 -40 ...+80	1/2 NPT *1)	7	21	4611
	3,9	-	162	-	IP66 (with cable gland)	II 2G Ex db mb IIC T4/ T6 Gb II 2G Ex eb mb IIC T4/ T6 Gb II 2D Ex tb IIIC T130°C Db	T4: -40 ...+80 T6: -40 ... +55 -40 ...+80	M20 x 1,5 *1)	7	20	4612
	–	5,3	–	23	IP66 (with cable gland)	II 2G Ex db mb IIC T4/ T6 Gb II 2G Ex eb mb IIC T4/ T6 Gb II 2D Ex tb IIIC T130°C Db	T4: -40 ...+80 T6: -40 ... +55 -40 ...+80	M20 x 1,5 *1)	7	21	4613
	5,5	–	228	–	4x	Cl. I, Div. 1, Gr. A - D Cl. II/III, Div. 1, Gr. E - G T3C (160°C)	-20 ... +60	Flying leads length 460 mm	8	1	3722
	–	5,9	–	26	4x	Cl. I, Div. 1, Gr. A - D Cl. II/III, Div. 1, Gr. E - G T3C (160°C)	-20 ... +60	Flying leads length 460 mm	8	5	3723

Standard voltages (±10%) 24 V d.c., 230 V a.c., other voltages on request. Design according to VEn 0580, EN 50014/50028. 100% duty cycle.
*1) Connector is not scope of delivery, see table »Accessories«
Attention: The protection class for coil series 46xx and 48xx is determined by the choice of cable gland.
Example: if an ATEX-certified cable gland is used that has Ex d type of protection, the solenoid will have the protection class Ex db mb; if a cable gland with Ex e type of proteciton is used, the solenoid will have protection class Ex eb mb.

Approvals

Model	Approvals ATEX	IECEx	FM	Datasheet
029x	KEMA 02 ATEX 1347 X	–	–	N/en 7.1.505
321x, 381x	EC-Declaration of Conformity	–	–	N/en 7.1.570
372x, 382x	–	–	CSA-LR 57643-6	N/en 7.1.575
42xx	KEMA 98 ATEX 4452 X	IECEx KEM 09.0068X	–	N/en 7.1.580
46xx	PTB 02 ATEX 2085 X	IECEx PTB 11.0094X	–	N/en 7.1.585

Our policy is one of continued research and development. We therefore reserve the right to amend, without notice, the specifications given in this document. (2001 - 5158i) © 2024 Norgren Ltd.

Partnumbers for international approval

Land/Approval	Coil/Code	029x	321x/381x	372x/382x	42xx	46xx	48xx
Europa/ATEX	Standard	x	x	–	x	x	x
International/IECEx	Standard	x	-	–	x	x	x
China/NEPSI	-01	–	–	–	x	x	x
Brasilien/INMETRO	-02	–	–	–	x	x	–
Korea/KOSHA (only gas approval)*	-03	–	–	–	x	x	x
Indien/CCOE	Standard	–	–	–	x	x	–
Taiwan/ITRI	-05	x	–	–	x	x	x
USA/FM	Standard	–	–	x	–	–	–
Kanada/CSA	Standard	–	–	x	–	–	–

Example: 0000000421002400-01
(Coil: 4210; Voltage: 24V DC; Approval: China)
* Approval for Korea/KOSHA is currently in progress; for further information, please contact our technical service.

Accessories

Electrical connection

Cable gland
Protection class Ex e, Ex d (ATEX),
Nickel plated brass/
Stainless steel



Page 7

For solenoid	Thread	Cable Ø (mm)	Material	Protection class (ATEX)	Ambient temperatur limitation *1)	Model
42xx	M20 x 1,5	7,0 ... 12,0	Plastic	II 2G Ex e / II 2D Ex t	See table	0589735
42xx	M20 x 1,5	10,0 ... 14,0	Plastic	II 2G Ex e / II 2D Ex t	See table	0589736
42xx	M20 x 1,5	6,0 ... 12,0	Plastic	II 2G Ex eb / II 2D Ex tb	See table	0589737
42xx	M20 x 1,5	5,0 ... 10,0	Plastic	II 2G Ex e / II 2D Ex t	See table	0589739
46xx	M20 x 1,5	5,0 ... 8,0	Nickel plated brass	II 2G Ex e / II 2D Ex t	-	0588819
46xx	M20 x 1,5	10,0 ... 14,0	Nickel plated brass	II 2G Ex d / II 2D Ex t	-	0588851
46xx	1/2 NPT	7,5 ... 11,9	Nickel plated brass	II 2G Ex d / II 2D Ex t	-	0588925
46xx, 48xx	M20 x 1,5	7,0 ... 12,0	Stainless steel 1.4404	II 2G Ex d / II 2D Ex t	-	0589395
46xx, 48xx	M20 x 1,5	10,0 ... 14,0	Stainless steel 1.4404	II 2G Ex d / II 2D Ex t	-	0589387

*1) The limitation of the temperature range to the mentioned range is due to the self-heating of the solenoid.

For solenoid	Ambient temperatur limitation solenoid 42xx		
	0589735 & 0589736 *2)	0589737	0589739 *2)
421x/426x	T4 & Dust Ex: -35°C ... + 80°C T6: -35°C ... + 55°C	T4 & Dust Ex: -40°C...+ 65°C T6: -40°C...+ 55°C	T4 & Dust Ex: -40°C...+ 78°C T6: -40°C...+ 55°C

*2) Tested for the lower level of mechanical risk (4 joule), an additional protection against impacts might be needed.

Silencer *1)	Exhaust guard *2)	Connector, form A
		
Page 8	Page 8	
M/S2 (G1/4)	0613422 (G1/4)	0570275
M/S4 (G1/2)	0613423 (G1/2)	

*1) For indoors use only
*2) For outdoors use

Our policy is one of continued research and development. We therefore reserve the right to amend, without notice, the specifications given in this document. (2001 - 5158i) © 2024 Norgren Ltd.

Dimensions
Valves

Dimensions in mm
Projection/First angle

1

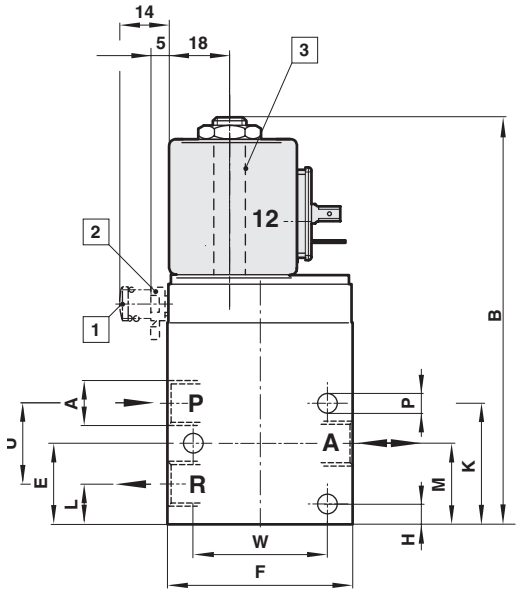

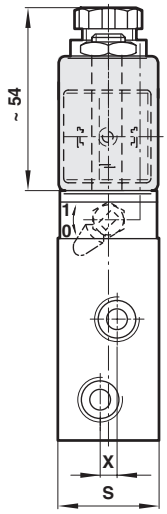

1 Manual override without detent
2 Manual override with detent
3 Solenoid 4 x 90° turnable

A	B	E	F	H	K	L	M	P	S	T	U	W	X	Model
G1/4	120	24,5	55	7,5	34,5	11	23	5,5	30	18,5	24	41	5	8020766
G1/4	127	24,5	55	7,5	34,5	11	23	5,5	30	18,5	24	41	5	8020767
G1/4	127	24,5	55	7,5	34,5	11	23	5,5	30	18,5	24	41	5	8020765
G1/2	157	77,5	65	31,5	–	29	50	7	35	23,5	33	46	–	8020867
G1/2	148	77,5	65	31,5	–	29	50	7	35	23,5	33	46	–	8020865

2

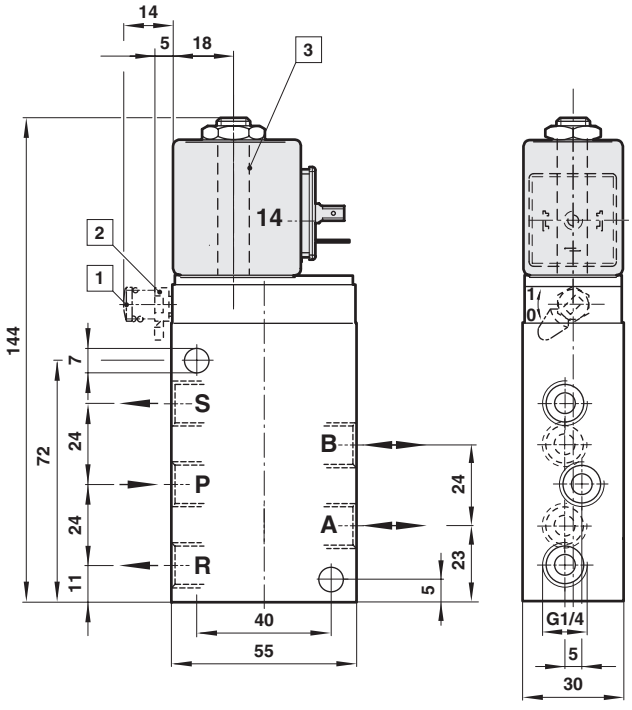

3

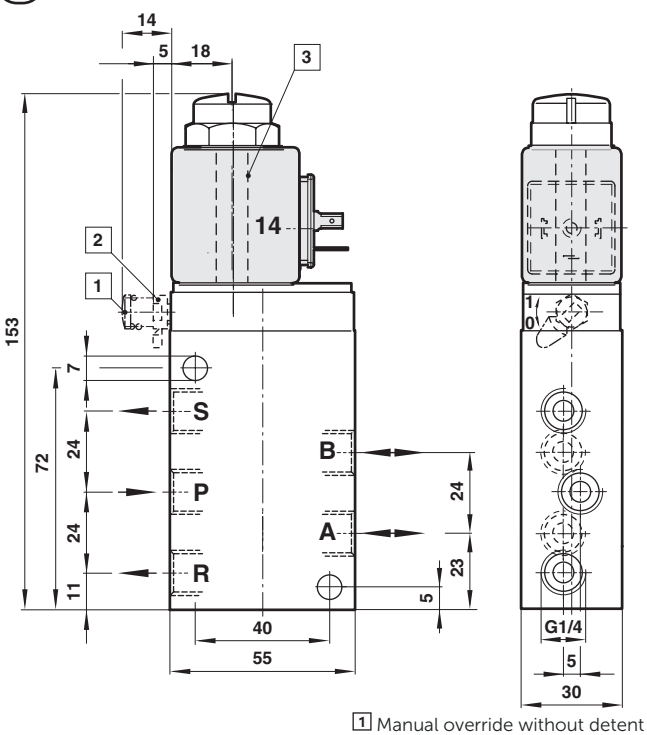

1 Manual override without detent
2 Manual override with detent
3 Solenoid 4 x 90° turnable

Our policy is one of continued research and development. We therefore reserve the right to amend, without notice, the specifications given in this document. (2001 - 5158i) © 2024 Norgren Ltd.

Dimensions in mm
Projection/First angle

4

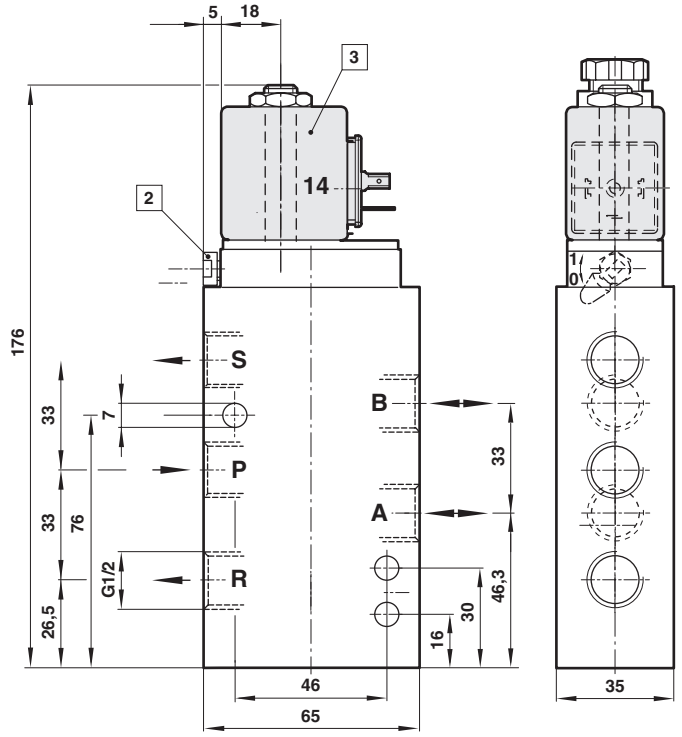

5

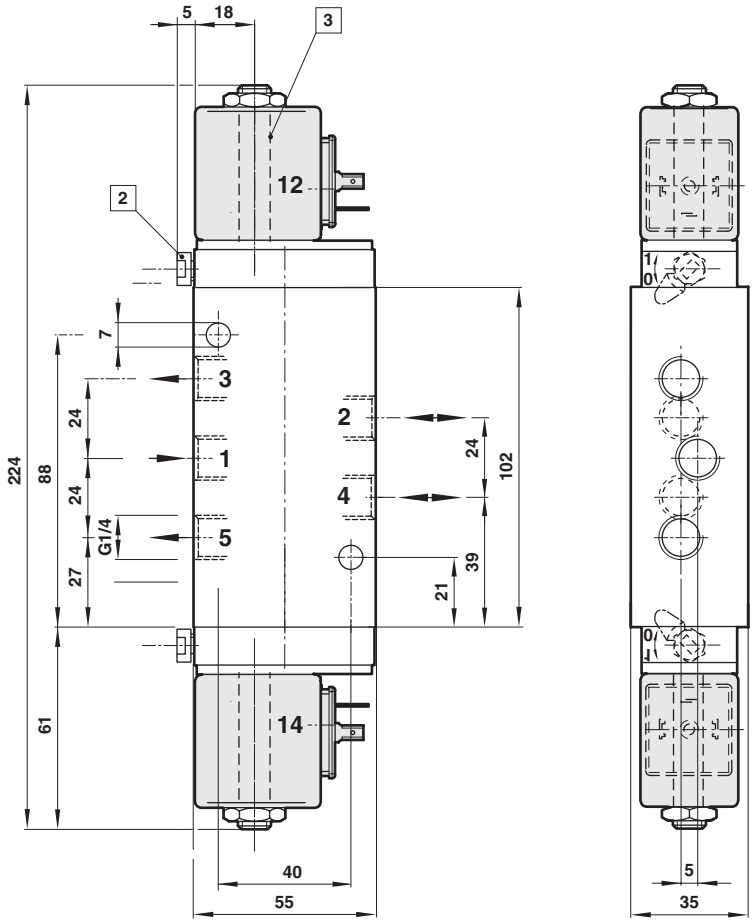

2 Manual override with detent
3 Solenoid 4 x 90° turnable

Our policy is one of continued research and development. We therefore reserve the right to amend, without notice, the specifications given in this document. (2001 - 5158i) © 2024 Norgren Ltd.

6

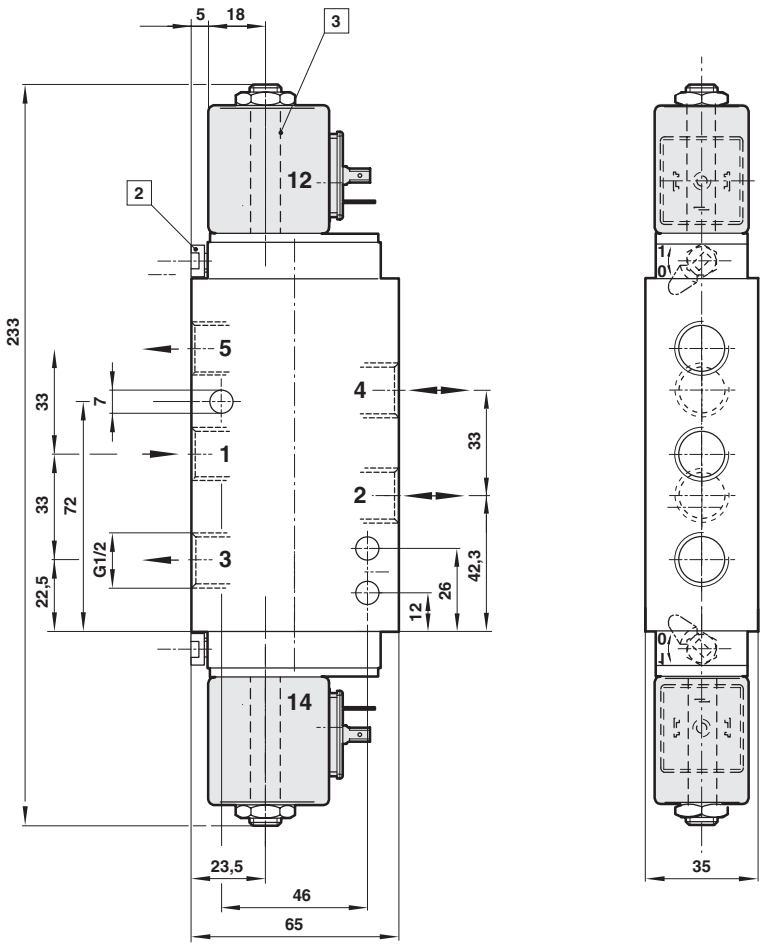

Dimensions in mm
Projection/First angle

2 Manual override with detent
3 Solenoid 4 x 90° turnable

Our policy is one of continued research and development. We therefore reserve the right to amend, without notice, the specifications given in this document. (2001 - 5158i) © 2024 Norgren Ltd.

Dimensions
Solenoid operators

Dimensions in mm
Projection/First angle

1 Weight: 0,15 kg

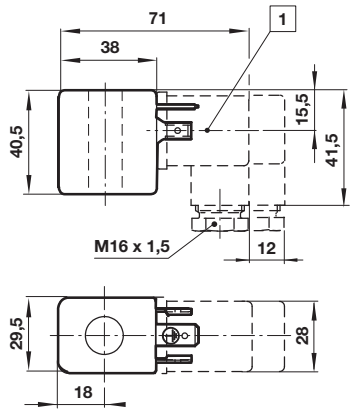

5 Weight: 0,5 kg

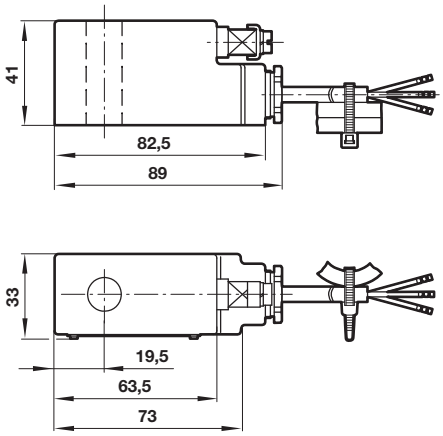

6 Weight: 0,4 kg

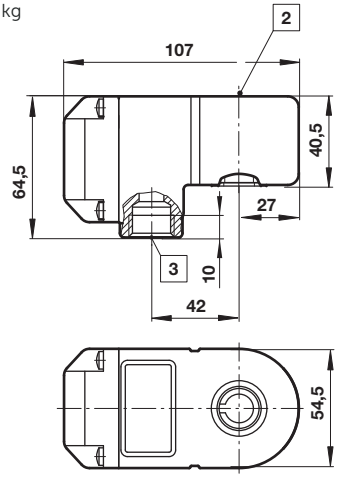

7 Weight: 0,85 kg

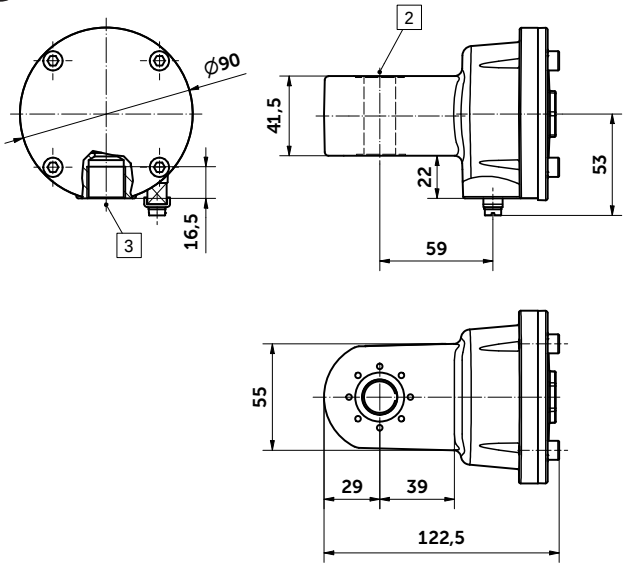

8 Weight: 0,5 kg

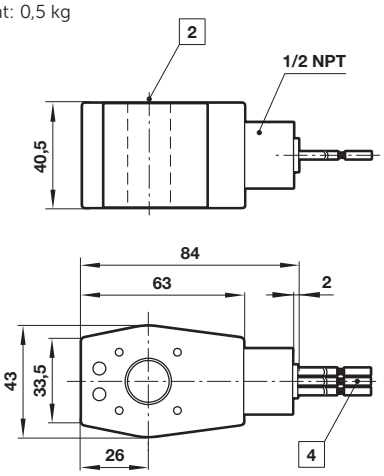

1 Connector can be indexed by 4x90°
2 Ø 16 or 13 (with spacer tube)
3 M20 x 1,5 or 1/2 - 14 NPT
4 Flying leads AWG 18 (460 mm long)

Our policy is one of continued research and development. We therefore reserve the right to amend, without notice, the specifications given in this document. (2001 - 5158i) © 2024 Norgren Ltd.

Circuit diagrams

1

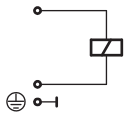

4

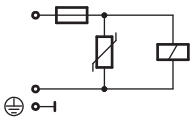

5

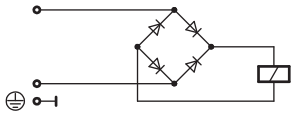

6

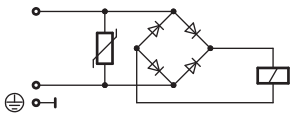

7

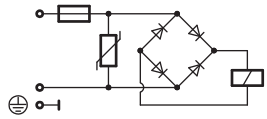

20

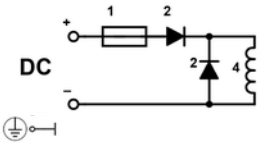

21

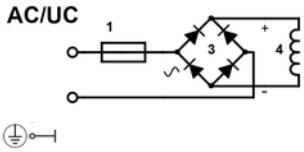

Silencer
Model: M/S2, M/S4

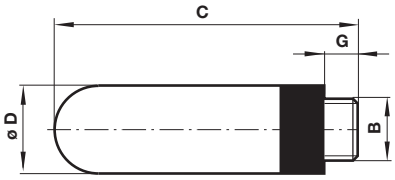

B	G	C	Ø D	Weight (g)	Model
G1/4	7	35,5	15,5	2,9	M/S2
G1/2	12	67	23	11,5	M/S4

Exhaust guard
Model: 0613422, 061323

Dimensions in mm
Projection/First angle

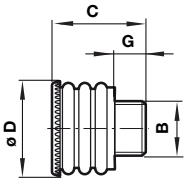

B	Suitable for	G	C	Ø D	Weight (g)	Model
1/4"	G1/4, 1/4 NPT	10	26,5	21	5	0613422
1/2"	G1/2, 1/2 NPT	12	33,5	29	11	0613423

Cable gland

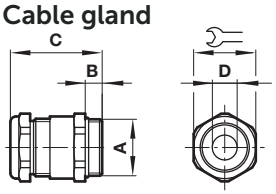

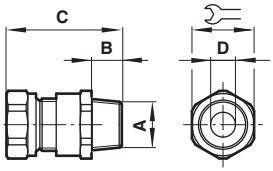

0588925
only

A	B	C	ø D		Model
M20 x 1,5	10	40	7,0 ... 12,0	24	0589735
M20 x 1,5	10	43	10,0 ... 14,0	27	0589736
M20 x 1,5	10	47,8	6,0 ... 12,0	24	0589737
M20 x 1,5	10	39,5	5,0 ... 10,0	24	0589739
M20 x 1,5	9	36	5,0 ... 8,0	22	0588819
M20 x 1,5	12	37	9,0 ... 14,0	30	0588851
1/2 NPT	15	58	7,5 ... 11,9	24	0588925
M20 x 1,5	16	40	7,0 ... 12,0	24	0589395
M20 x 1,5	16	41	10,0 ... 14,0	24	0589387

Warning

These products are intended for use in industrial compressed air systems only. Do not use these products where pressures and temperatures can exceed those listed under »**Technical features/ data**«.
Before using these products with fluids other than those specified, for non-industrial applications, life-support systems or other applications not within published specifications, consult Norgren.

Through misuse, age, or malfunction, components used in fluid power systems can fail in various modes.

The system designer is warned to consider the failure modes of all component parts used in fluid power systems and to provide adequate safeguards to prevent personal injury or damage to equipment in the event of such failure.
System designers must provide a warning to end users in the system instructional manual if protection against a failure mode cannot be adequately provided.
System designers and end users are cautioned to review specific warnings found in instruction sheets packed and shipped with these products.

Our policy is one of continued research and development. We therefore reserve the right to amend, without notice, the specifications given in this document. (2001 - 5158i) © 2024 Norgren Ltd.