ISSUE DATE:

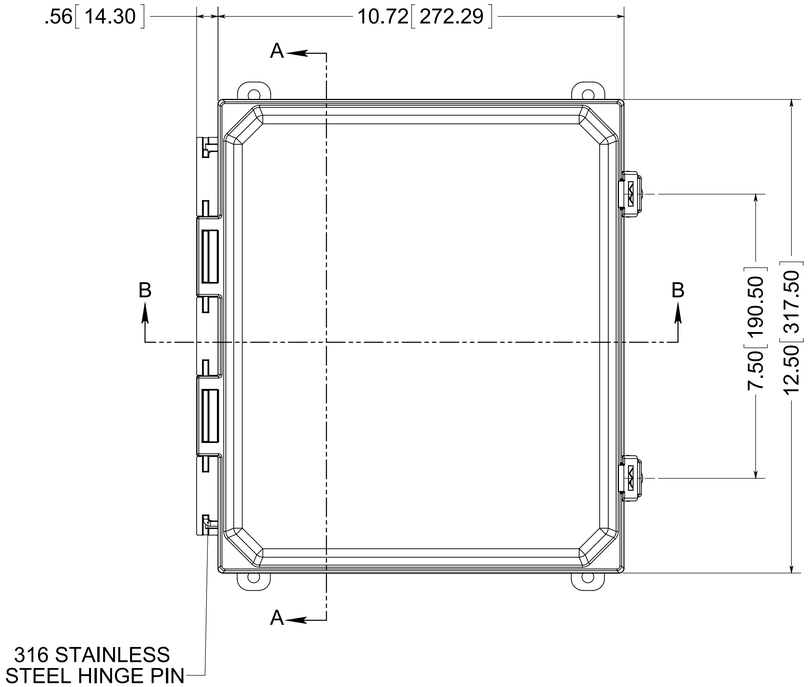

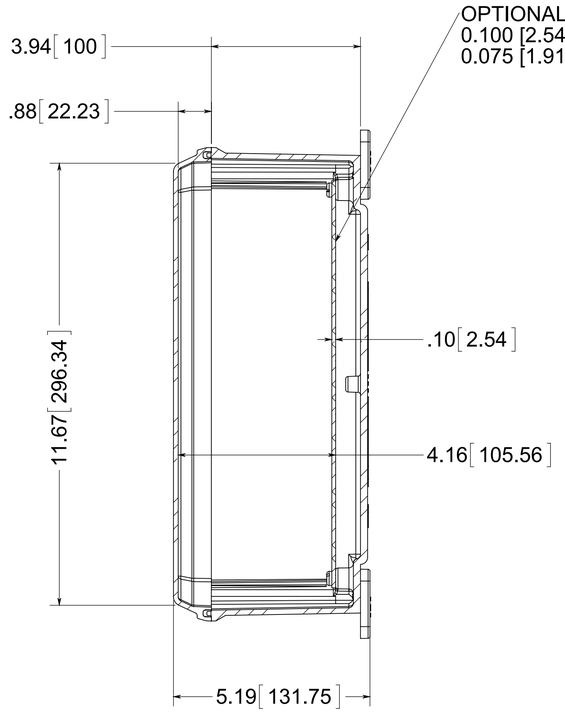

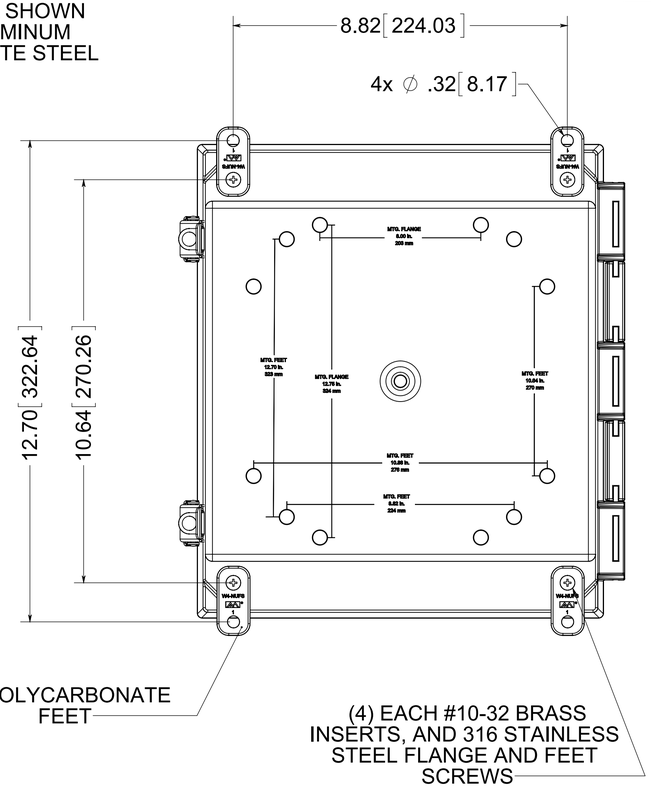

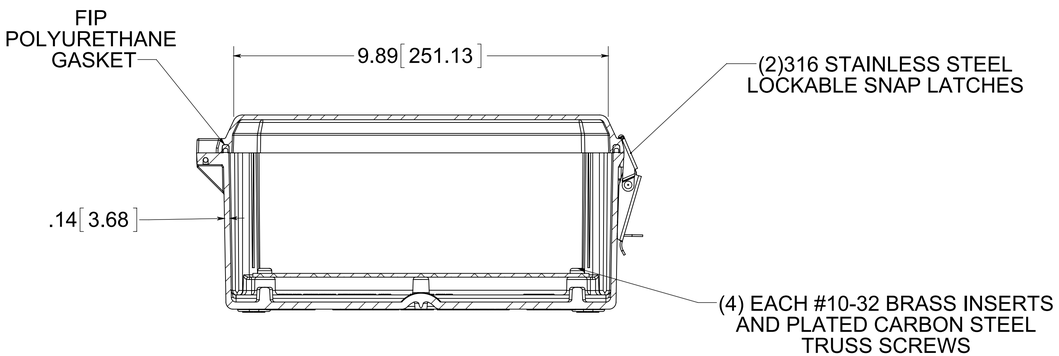

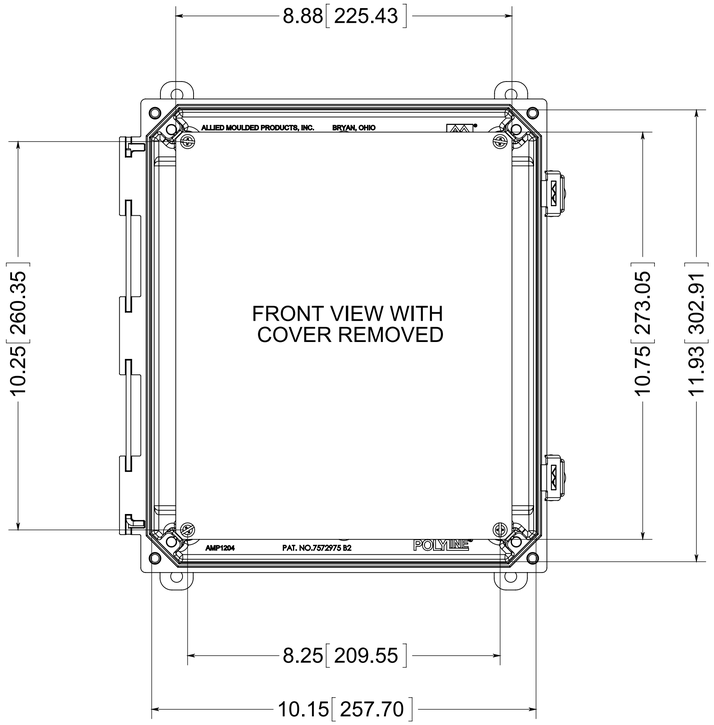

MATERIAL:
BOX - INJECTED POLYCARBONATE
STANDARD COVER - INJECTED POLYCARBONATE
CLEAR COVER - INJECTED POLYCARBONATE

PART No. PCJ12104L

for more information visit
www.hammfg.com
Data subject to change without notice

Drawing Not to Scale