

Model number

VAZ-G10-TERM

Passive bus termination G10

Features

- Ultra-compact enclosure
- Extension of strand length to over 200 m
- Two different impedances integrated
- Suitable for all topologies
- Two-stage voltage monitor and display for AS-Interface and AUX
- Gold-plated and machined contacts
- Degree of protection IP68 / IP69K

Function

The passive terminator VAZ-G10-TERM in the G10-design includes two different terminations in one housing. With the two terminators, all topologies of an AS-Interface network can be terminated. The termination resistor Z1 offers the right impedance for most topologies. The termination resistor Z2 is used when Z1 does not reach the required signal quality improvement.
Two LEDs per terminator monitor the status of each supply voltage. On the bus termination, the voltage is shown in 2 stages. The free flat cable channel can be used to monitor the external power supply U_{AUX}.

Dimensions

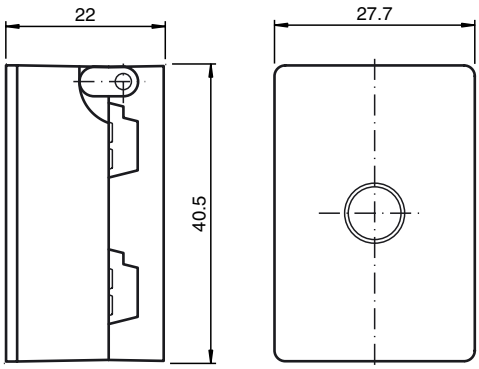

Electrical connection

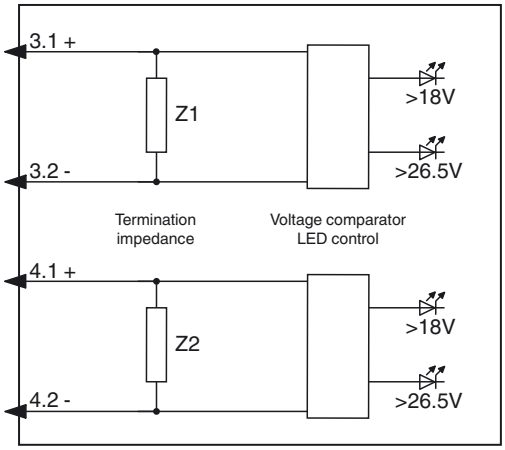

Indicating / Operating means

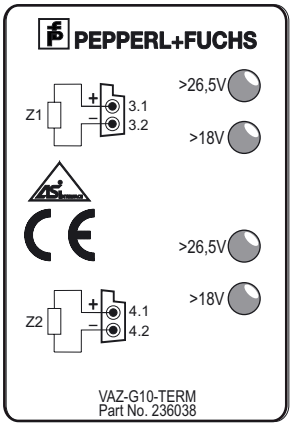

Release date: 2014-07-10 16:04 Date of issue: 2014-07-10 236038_eng.xml

Technical data

General specifications		
AS-Interface specification		V3.0
UL File Number		E223772 "For use in NFPA 79 Applications only"
Indicators/operating means		
LED green		AS-Interface voltage > 26 V: LED lights
LED yellow		AS-Interface voltage > 18.5 V: LED lights
Electrical specifications		
Rated operating voltage	U_e	18.5 ... 31.6 V
Rated operating current	I_e	≤ 15 mA per connection
Protection class		III
Ambient conditions		
Ambient temperature		-25 ... 70 °C (-13 ... 158 °F)
Storage temperature		-25 ... 85 °C (-13 ... 185 °F)
Shock and impact resistance		30 *g*, 11 ms in 6 spatial directions 3 shocks 10 *g*, 16 ms in 6 spatial directions 1000 shocks
Vibration resistance		0.75 mm 10 ... 57 Hz , 5 g 57 ... 150 Hz, 20 cycles
Mechanical specifications		
Degree of protection		IP67 IP67 / IP68 / IP69K with flat cable VAZ-FK-S-*
Connection		via Flat cable
Material		
Housing		PBT PC
Mounting screw		Stainless steel 1.4305 / AISI 303
Mass		100 g
Tightening torque, fastening screws		1.65 Nm
Compliance with standards and directives		
Directive conformity		
EMC Directive 2004/108/EC		EN 61326:2006
Standard conformity		
Noise immunity		EN 61000-6-2:2005, EN 61326-1:2006, EN 50295:1999
Emitted interference		EN 61000-6-4:2007
Degree of protection		EN 60529:2000
Fieldbus standard		EN 50295:1999, IEC 62026-2:2006
Approvals and certificates		
UL approval		cULus Listed, Type 1 enclosure
Maximum permissible ambient temperature		≤ 65 °C (≤ 149 °F)

Notes

Mounting instructions

You may screw the device onto a level mounting surface using two M4 attachment screws. The attachement screws are not included.

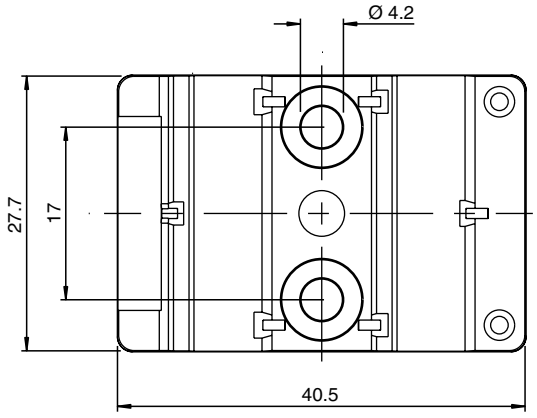

Purpose

Improvement of signal quality and voltage monitoring.
Operation on the most remote AS-Interface strand.
Maximum 2 repeaters in line possible.
When using repeaters please check if a terminator is integrated.

Release date: 2014-07-10 16:04 Date of issue: 2014-07-10 236038_eng.xml

Refer to “General Notes Relating to Pepperl+Fuchs Product Information”.
Pepperl+Fuchs Group www.pepperl-fuchs.com
USA: +1 330 486 0001 fa-info@us.pepperl-fuchs.com
Germany: +49 621 776 4411 fa-info@de.pepperl-fuchs.com
Singapore: +65 6779 9091 fa-info@sg.pepperl-fuchs.com
PEPPERL+FUCHS SENSING YOUR NEEDS