E30024

Progressive ring fitting

PROGRESSIVE RG FITTING D10 NPT

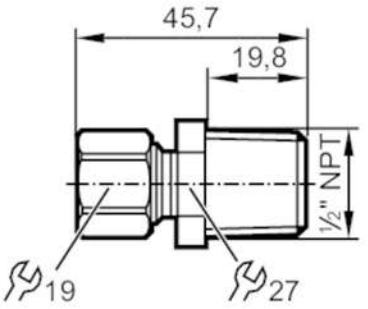

CRN

Application		
Installation		Progressive ring fitting
Pressure rating	[bar]	50
Tests / approvals		
Pressure Equipment Directive		A possible classification to PED depends on the application and has to be carried out by the user / operator.
Pressure Equipment Directive EAC		The adapter is intended for use in devices, machines and installations that do not fall under the categories of the technical rule TR CU 032/2013.
Safety instructions		The compatibility between medium and product material has to be checked in all applications.
Mechanical data		
Weight	[g]	84.9
Materials		stainless steel (1.4571/316Ti)
Sensor connection		Ø 10 mm
Process connection		threaded connection 1/2" NPT
Remarks		
Pack quantity		1 pcs.