MEECH-ARTX STAINLESS STEEL VORTEX TUBES

1. COMPRESSED AIR SUPPLY

Air supplies are plagued with condensed water vapour and droplets in the air lines. This condensation leads to rust and dirt in the air lines. Also, some compressor will allow oil or oil vapour to enter the air line.

Small orifices in the MEECH-ARTX Vortex Tube, Control Cooler, or Model 60015 Air Gun may become clogged with the rust, dirt and water droplets. A 5-micron filter will separate 99% of the foreign material from the air supply, allowing virtually maintenance-free operation. The use of an oil filter with an effective filtration of 0.01 ppm will remove the oil droplets for an even cleaner air supply.

Keep in mind that the current line or air hose might contain dirt or oil and should be blown out before installation. Also, pipe thread sealant or tape must be carefully applied to avoid clogging product orifices.

When the temperature of the air inside the Vortex Tube, Control Cooler or Model 60015 Air Gun reaches 0°C, the water vapour in the air will start to freeze. If this poses a problem with the ice clogging the orifices of the generator inside the tube, an air dryer must be used to lower the dew point to keep out the water vapour. A dryer rated at - 19°C will produce a dew point low enough to eliminate the water vapour freezing in the orifices of the generator.

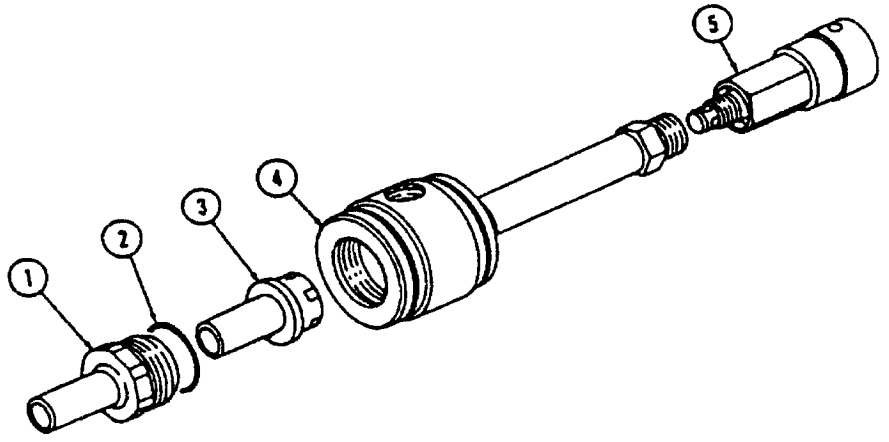

1. Cold End Cap
2. O Ring (-116)
3. Generator
4. Spin Chamber
5. Hot End Valve Assembly

2. COMPRESSED AIR SUPPLY LINE SIZE

To obtain maximum performance from the MEECH-ARTX products, measurements of pressure (psi) and volume (cfm) of air must be obtained.

Line pressure of 70-90 psi (5 - 6 Bar) can be present without a sufficient volume (cfm) of air. To ensure that both pressure and volume are present to efficiently operate the MEECH-ARTX products, a line size of 3/8" pipe of 1/2" hose should be used for applications up to 10ft from the main header. Use 1/2" pipe and 3/4" hose up to 20ft and 3/4" pipe and 1" hose up to 50ft from the header.

3. GENERATORS - VOLUME OF AIR

The MEECH-ARTX generator determines the volume of air through the Vortex Tube. These generators are rated for 10,15,25 and 30 cfm at 80 psi (280,420,700, 990 LPM at 5.5 Bar). To ensure that your air compressor can generate these volumes, the horsepower of the compressor can be multiplied by four to determine the cfm capacity. A multiple of 5 can be used on newer compressors over 30 horsepower.

The Experimental Kit Model 20400 contains 1 medium vortex tube, 8 generators, a cold end silencer and. To change the generator and thus the volume of air, simply remove the cold cap(1) using a 1" crescent wrench. Pull out the O ring (2) and generator (3) and replace it with the desired generator. Then reassemble the O ring and cold cap tightly.

The percentage of the incoming air, from the compressed air supply, exiting from the cold end is the cold fraction. The MEECH-ARTX generator determines the cfm. Therefore, using a 10 cfm (280 LPM) generator with a cold fraction of 60% means 6 cfm (170 PLM) of air out the cold end and 4 cfm (113 LPM) out the hot end.

The cold fraction can be changed by turning the hot end valve. There always has to be some air flowing through the hot end to create cooling.

By turning the hot end valve between 1 and 1 1/4 turns, the cold end air temperature will be at its lowest point.

There are 2 types of generators for both of the cfm ranges. the H is for maximum BTU cooling. This occurs when the cold fraction is above 50%. For low flow but very cold temperature use the L generator and a cold fraction below 50%.

The generators are colour coded and marked for the different cfm ratings and whether they are for maximum cooling or low temperature. Please refer to the price sheet for the colour code of each cfm.

4. DUCTING THE AIR

The air existing from the cold end or hot end is just above atmosphere pressure. It is important to use a tube, when ducting the air, that is at least as large as the outlet of the Vortex Tube. Also, since outlet pressure is low, restricting the ducted air through a small nozzle or into a container will create back pressure and cause poor cooling or heating performance.

Several ducting systems are available from MEECH-ARTX using the snap flex line. You can customise these snap together flexible units to fit the length and direction you need for your application.

5. CLEANING AND MAINTENANCE

The MEECH-ARTX Vortex Tube has no moving parts. Clean compressed air moving through the tube will not cause wear on the parts and will provide you with the same reliable service for an indefinite period of time.

Occasionally, dirt, water, or oil may enter the tube from the compressed air supply and hinder the performance. When this happens, simply take the unit apart, clean the parts, and reassemble, tightly replacing the cold end cap to properly seat the generator.

VORTEX TUBE HEAT REMOVAL REQUIREMENTS AND FORMULAS

- DETERMINING BTUH REQUIRED FOR COOLING A PRODUCT

BTU = Specific heat of the product x weight x temp. Difference (actual vs desired)
* Since a Vortex Tube is rated in BTU per hour, multiply the result of the formula by 60 to get BTUH -

- FLOW OF AIR AVAILABLE

$$\text{TOTAL FLOW} = \frac{\text{INLET PSIG} + 15 \times \text{RATING OF THE GENERATOR}}{115}$$

* The rating of the MEECH-ARTX GENERATOR is determined at 80 PSIG. If pressure is other than 80, this formula can be used to determine total flow.

- AIR CONDITIONING POWER

The cooling and heating power in BTUH can be found by using these formulas.

FOR COOLING: BTUH = 1.0746 (CFMc) (Ti-Tc)
FOR HEATING: BTUH = 1.0746 (CFMh) (Th-Ti)

WHERE: CF = COLD FRACTION
CMFt = TOTAL AIRFLOW
CFMc = COLD AIRFLOW = CFMt (CF)
CFMh = HOT AIRFLOW = CFMt (100-CF)
Ti = INLET TEMPERATURE
TC = COLD AIR OUTLET TEMPERATURE
Th = HOT AIR OUTLET TEMPERATURE

- HEAT BALANCE FORMULA

Cold fraction can be computed from the temperature readings from the inlet temperature (TI), the cold air outlet temp. (TC), and the hot air temp (TH), so that;

$$\text{COLD FRACTION \% (CF)} = \frac{Th - Ti + 4}{Th - Tc} \times 100$$

VORTEX TUBE PERFORMANCE

TEMPERATURE DROP C ° AT 70% COLD FRACTION

GENERATOR	SIZE	60PSI (4 BAR)	80PSI (5.5 Bar)	100PSI (7 Bar)
GREEN	10L	47	53	57
YELLOW	10H	46	51	55
WHITE	15L	49	54	56
RED	15H	46	50	50
GREY	25L	50	50	51
BLUE	25H	44	46	50
BROWN	35L	44	49	51
BEIGE	35H	42	44	45

CLOSED TO 2 ½ = 70% COLD FRACTION.

- 19 °C DEW POINT = ANOTHER 11 °C DROP.