BF150T4E110

FOUR-POLE CONTACTOR, IEC OPERATING CURRENT ITH (AC1) = 160A, AC/DC COIL, 110VAC/DC



Product designation			Power contactor
Product type designation			BF150
Contact characteristics			
Number of poles		Nr.	4
Rated insulation voltage Ui IEC/EN		V	1000
Rated impulse withstand voltage Uimp		kV	8
Operational frequency			
	min	Hz	25
	max	Hz	400
IEC Conventional free air thermal current Ith		A	165
Operational current Ie			
	AC-1 (≤40°C)	A	165
	AC-1 (≤55°C)	A	135
	AC-1 (≤70°C)	A	118
	AC-3 (≤440V ≤55°C)	A	150
	AC-4 (400V)	A	70
Rated operational power AC-1 (T≤40°C)			
	230V	kW	62
	400V	kW	110
	500V	kW	136
	690V	kW	187
IEC max current Ie in DC1 with L/R ≤ 1ms with 1 poles in series			
	≤24V	A	165
	48V	A	165
	75V	A	150
	110V	A	10
	220V	A	–
IEC max current Ie in DC1 with L/R ≤ 1ms with 2 poles in series			
	≤24V	A	165
	48V	A	165
	75V	A	165
	110V	A	150
	220V	A	14
IEC max current Ie in DC1 with L/R ≤ 1ms with 3 poles in series			
	≤24V	A	165
	48V	A	165
	75V	A	165
	110V	A	160
	220V	A	150
IEC max current Ie in DC1 with L/R ≤ 1ms with 4 poles in series			
	≤24V	A	165
	48V	A	165
	75V	A	165
	110V	A	165
	220V	A	165

The characteristics described in this document are subject to updates or modifications at any time. The descriptions, technical and functional information, illustrations and instructions in this brochure are purely illustrative, and are consequently not contractually binding

IEC max current Ie in DC3-DC5 with L/R ≤ 15ms with 1 poles in series			
	≤24V	A	165
	48V	A	60
	75V	A	44
	110V	A	6
	220V	A	–
IEC max current Ie in DC3-DC5 with L/R ≤ 15ms with 2 poles in series			
	≤24V	A	165
	48V	A	82
	75V	A	70
	110V	A	80
	220V	A	7
IEC max current Ie in DC3-DC5 with L/R ≤ 15ms with 3 poles in series			
	≤24V	A	165
	48V	A	195
	75V	A	110
	110V	A	120
	220V	A	120
IEC max current Ie in DC3-DC5 with L/R ≤ 15ms with 4 poles in series			
	≤24V	A	165
	48V	A	130
	75V	A	130
	110V	A	150
	220V	A	150
Short-time allowable current for 10s (IEC/EN60947-1)		A	1200
Protection fuse			
	gG (IEC)	A	250
	aM (IEC)	A	160
Making capacity (RMS value)		A	1500
Breaking capacity at voltage			
	440V	A	1200
	500V	A	1025
	690V	A	905
Resistance per pole (average value)		mΩ	0.45
Power dissipation per pole (average value)			
	Ith	W	12
	AC3	W	10.1
Tightening torque for terminals			
	min	Nm	6
	max	Nm	7
	min	lbin	35.4
	max	lbin	44.3
Tightening torque for coil terminal			
	min	Nm	0.8
	max	Nm	1
	min	lbin	0.59
	max	lbin	0.74
Max number of wires simultaneously connectable		Nr.	2
Conductor section			
AWG/Kcmil			
	max		2/0
Flexible w/o lug conductor section			
	min	mm²	1.5

The characteristics described in this document are subject to updates or modifications at any time. The descriptions, technical and functional information, illustrations and instructions in this brochure are purely illustrative, and are consequently not contractually binding

		max	mm²	70
	Flexible c/w lug conductor section			
		min	mm²	1.5
		max	mm²	70
Power terminal protection according to IEC/EN 60529				IP20 front
Mechanical features				
Operating position				
		normal		Vertical plan
		allowable		±30°
Fixing				Screw / DIN rail 35mm
Weight			g	2460
Conductor section				
	AWG/kcmil conductor section			
		max		2/0
Operations				
Mechanical life			cycles	15000000
Electrical life			cycles	800000
Safety related data				
Performance level B10d according to EN/ISO 13489-1				
		rated load	cycles	800000
Mirror contats according to IEC/EN 609474-4-1				yes
EMC compatibility				yes
AC coil operating				
Rated AC voltage at 50/60Hz, 60Hz				
		min	V	60
		max	V	110
AC operating voltage				
	of 50/60Hz coil powered at 50Hz			
	pick-up			
		min	%Us	80 Us min
		max	%Us	110 Us max
	drop-out			
		max	%Us	≤70 Us min
	of 50/60Hz coil powered at 60Hz			
	pick-up			
		min	%Us	80 Us min
		max	%Us	110 Us max
	drop-out			
		max	%Us	≤70 Us min
AC average coil consumption at 20°C				
	of 50/60Hz coil powered at 50Hz			
		in-rush	VA	70…175
		holding	VA	1.7…3.5
	of 50/60Hz coil powered at 60Hz			
		in-rush	VA	70…175
		holding	VA	1.7…3.5
	of 60Hz coil powered at 60Hz			
		in-rush	VA	70…175
		holding	VA	1.7…3.5
Dissipation at holding ≤20°C 50Hz			W	1.3…1.5
DC coil operating				
DC rated control voltage				

The characteristics described in this document are subject to updates or modifications at any time. The descriptions, technical and functional information, illustrations and instructions in this brochure are purely illustrative, and are consequently not contractually binding

			min	V	60
			max	V	110
DC operating voltage					
	pick-up				
			min	%Us	80 Us min
			max	%Us	110 Us max
	drop-out				
			max	%Us	≤70 Us min
Average coil consumption ≤20°C					
			in-rush	W	70…80
			holding	W	1.3…1.5
Max cycles frequency					
Mechanical operation				cycles/h	2000
Operating times					
Average time for Us control					
	in AC				
		Closing NO			
			min	ms	45
			max	ms	90
		Opening NO			
			min	ms	24
			max	ms	60
	in DC				
		Closing NO			
			min	ms	45
			max	ms	90
		Opening NO			
			min	ms	24
			max	ms	60
UL technical data					
Yielded mechanical performance					
	for three-phase AC motor				
			200/208V	HP	50
			220/230V	HP	50
			460/480V	HP	100
			575/600V	HP	125
General USE					
	Contactor				
			AC current	A	165
Short-circuit protection fuse, 600V					
	High fault				
			Short circuit current	kA	100
			Fuse rating	A	200
			Fuse class		J
	Standard fault				
			Short circuit current	kA	10
			Fuse rating	A	250
			Fuse class		RK5
Ambient conditions					
Temperature					
	Operating temperature				
			min	°C	-40
			max	°C	70
	Storage temperature				

The characteristics described in this document are subject to updates or modifications at any time. The descriptions, technical and functional information, illustrations and instructions in this brochure are purely illustrative, and are consequently not contractually binding

	min	°C	-50
	max	°C	80
Max altitude		m	3000

Resistance & Protection

Pollution degree	3

Dimensions

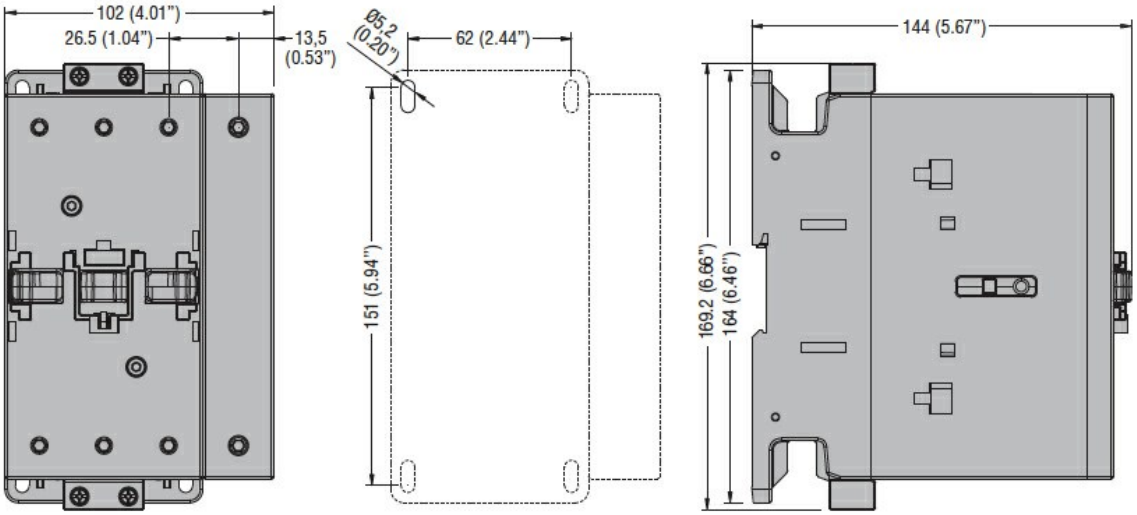

Wiring diagrams

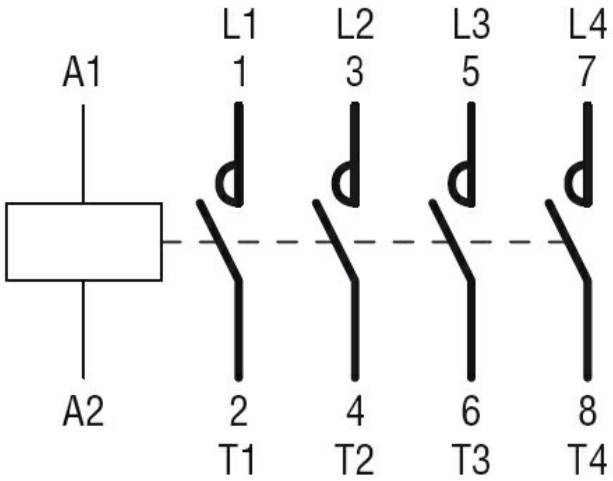

Certifications and compliance

Compliance

CSA C22.2 n° 60947-1
CSA C22.2 n° 60947-4-1
IEC/EN/BS 60947-1
IEC/EN/BS 60947-4-1
UL 60947-1
UL 60947-4-1

Certificates

CCC
cULus
EAC

ETIM classification

ETIM 8.0	EC000066 - Power contactor, AC switching

The characteristics described in this document are subject to updates or modifications at any time. The descriptions, technical and functional information, illustrations and instructions in this brochure are purely illustrative, and are consequently not contractually binding