IFR204

Inductive full-metal sensor

IFB2004BARKG/AM/SC/3,0M/2LED

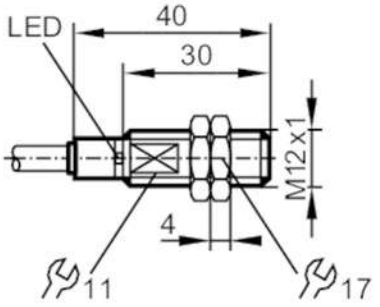

Product characteristics		
Electrical design		PNP/NPN
Output function		normally open
Sensing range	[mm]	4
Housing		threaded type
Dimensions	[mm]	M12 x 1 / L = 40
Application		
Special feature		Increased sensing range; Full-metal housing; Optical setting aid; anti-spatter
Application		Use in welding applications
Pressure rating	[bar]	50
Note on pressure rating		sensing face
Electrical data		
Operating voltage	[V]	10...36 DC
Protection class		III
Reverse polarity protection		yes
Outputs		
Electrical design		PNP/NPN
Output function		normally open
Max. voltage drop switching output DC	[V]	2.5
Minimum load current	[mA]	2
Max. leakage current	[mA]	0.6
Permanent current rating of switching output DC	[mA]	100
Switching frequency DC	[Hz]	75
Short-circuit protection		yes
Type of short-circuit protection		pulsed
Overload protection		yes

IFR204

Inductive full-metal sensor

IFB2004BARKG/AM/SC/3,0M/2LED

Detection zone			
Sensing range	[mm]	4	
Operating distance	[mm]	0...3.25	
Increased sensing range		yes	
Accuracy / deviations			
Correction factor		steel: 1 / stainless steel: 0.7 / brass: 0.2 / aluminium: 0.1 / copper: 0	
Hysteresis	[% of Sr]	1...20	
Operating conditions			
Ambient temperature	[°C]	-25...70	
Protection		IP 67	
Tests / approvals			
EMC		EN 61000-4-2 ESD	4 kV CD / 8 kV AD
		EN 61000-4-3 HF radiated	10 V/m
		EN 61000-4-4 Burst	2 kV
		EN 61000-4-6 HF conducted	10 V
		EN 55011 emission	class B
Impact resistance			1 J
MTTF	[years]	1422	
UL approval		Ta	0...40 °C
		Enclosure type	Type 1
		voltage supply	Limited Voltage/Current
		File number UL	E174191
Mechanical data			
Weight	[g]	138.2	
Housing		threaded type	
Mounting		flush mountable	
Dimensions	[mm]	M12 x 1 / L = 40	
Thread designation		M12 x 1	
Materials		housing: stainless steel (1.4404 / 316L) anti-spatter; sensing face: stainless steel (1.4404 / 316L) anti-spatter; lock nuts: stainless steel (1.4404 / 316L) anti-spatter	
Full-metal housing		yes	
Displays / operating elements			
Display		switching status	1 x LED, green
		setting aid	1 x LED, red
Optical setting aid		yes	
Accessories			
Items supplied		lock nuts: 2	
Remarks			
Pack quantity		1 pcs.	

IFR204

Inductive full-metal sensor

IFB2004BARKG/AM/SC/3,0M/2LED

Electrical connection

Cable: 3 m, PVC; 2 x 0.5 mm²

Connection

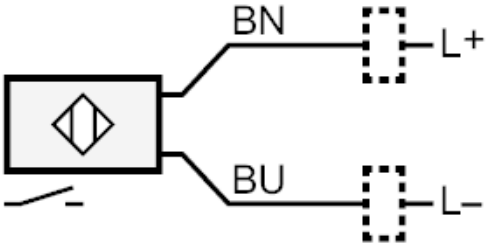

	Core colours :
BN =	brown
BU =	blue

Diagrams and graphs

Installation

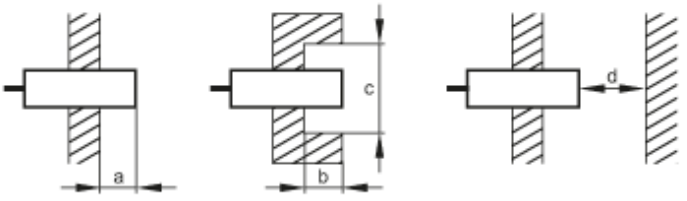

[mm]	a	b	c (Ø)	d
Fe	0	0	-	12
Al	9	15	36	12

