# IGS280

## Inductive sensor

IGB3015-BPKG/K1/US-104

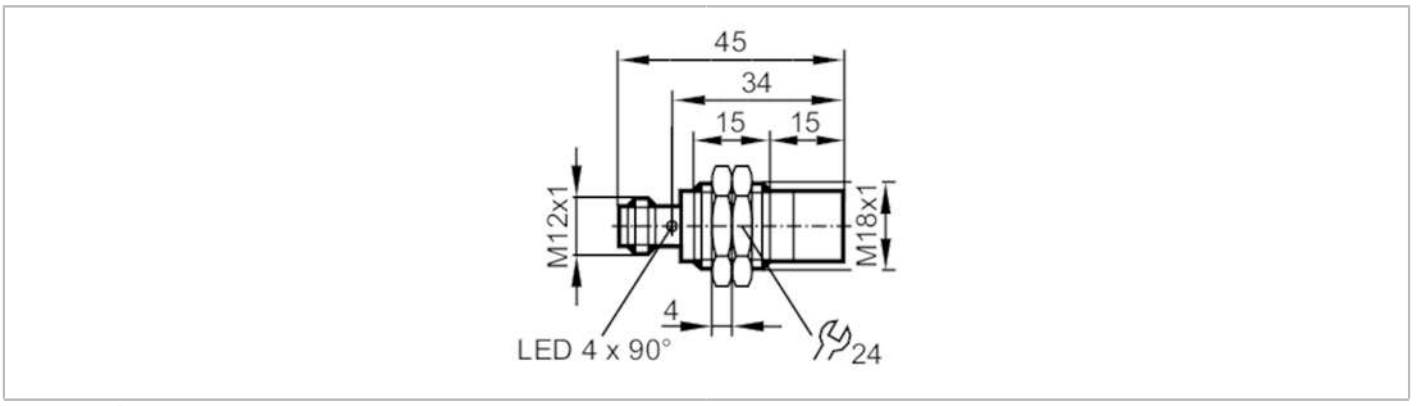


| | | |
|---|---|---|
| **Product characteristics** | | |
| Electrical design | | PNP |
| Output function | | normally open |
| Sensing range | [mm] | 15 |
| Housing | | threaded type |
| Dimensions | [mm] | M18 x 1 / L = 45 |
| **Application** | | |
| Special feature | | Gold-plated contacts; Increased sensing range; Correction factor K = 1; Magnetic-field immune |
| Application | | Suitable for industrial, mobile, cooling and lubricating applications; Industrial applications / factory automation |
| Magnetic-field immune | | yes |
| Max. magnetic field immunity | [mT] | 300 |
| **Electrical data** | | |
| Operating voltage | [V] | 10...30 DC |
| Current consumption | [mA] | < 20 |
| Protection class | | III |
| Reverse polarity protection | | yes |
| **Outputs** | | |
| Electrical design | | PNP |
| Output function | | normally open |
| Max. voltage drop switching output DC | [V] | 2.5 |
| Permanent current rating of switching output DC | [mA] | 100 |
| Switching frequency DC | [Hz] | 2000 |
| Short-circuit protection | | yes |
| Overload protection | | yes |
| **Detection zone** | | |
| Sensing range | [mm] | 15 |
| Real sensing range Sr | [mm] | 15 ± 10 % |
| Operating distance | [mm] | 0...12.15 |

# IGS280

## Inductive sensor

IGB3015-BPKG/K1/US-104

| | | | |
|---|---|---|---|
| Increased sensing range | | | yes |
| **Accuracy / deviations** | | | |
| Correction factor | | | steel: 1 / stainless steel: 1 / brass: 1 / aluminium: 1 / copper: 1 |
| Hysteresis | [% of Sr] | | 3...15 |
| Switch point drift | [% of Sr] | | -10...10 |
| Correction factor K = 1 | | | yes |
| **Operating conditions** | | | |
| Ambient temperature | [°C] | | -40...85 |
| Protection | | | IP 65; IP 66; IP 67; IP 68; IP 69K |
| **Tests / approvals** | | | |
| EMC | | EN 61000-4-2 ESD | 4 kV CD / 8 kV AD |
| | | EN 61000-4-3 HF radiated | 10 V/m |
| | | EN 61000-4-4 Burst | 2 kV |
| | | EN 61000-4-6 HF conducted | 10 V |
| | | EN 55011 | class B |
| Vibration resistance | | EN 60068-2-6 Fc | 20 g 11 ms half-sine; 3 shocks each in every direction of the 3 coordinate axes |
| Shock resistance | | EN 60068-2-27 Ea | 100 g 11 ms half-sine; 3 shocks each in every direction of the 3 coordinate axes |
| Continuous shock resistance | | EN 60068-2-27 | 40 g 6 ms; 4000 shocks each in every direction of the 3 coordinate axes |
| Fast temperature change | | EN 60068-2-14 Na | TA = -40 °C; TB = 85 °C; t1 = 30 min; t2 = < 10 s; 50 cycles |
| Salt spray test | | EN 60068-2-52 Kb | severity level 5 (4 test cycles) |
| MTTF | [years] | | 465 |
| Embedded software included | | | yes |
| UL approval | | Ta | -25...70 °C |
| | | Enclosure type | Type 1 |
| | | power supply | Limited Voltage/Current |
| | | UL Approval no. | A005 |
| | | File number UL | E174191 |
| **Mechanical data** | | | |
| Weight | [g] | | 37.8 |
| Housing | | | threaded type |
| Mounting | | | non-flush mountable |
| Dimensions | [mm] | | M18 x 1 / L = 45 |
| Thread designation | | | M18 x 1 |
| Materials | | | brass white bronze coated; sensing face: LCP white; LED window: PEI; lock nuts: brass white bronze coated |
| **Displays / operating elements** | | | |
| Display | | switching status | 4 x LED, yellow |
| **Accessories** | | | |
| Items supplied | | | lock nuts: 2 |
| **Remarks** | | | |
| Pack quantity | | | 1 pcs. |

# IGS280

## Inductive sensor

**IGB3015-BPKG/K1/US-104**

## Electrical connection - plug

Connector: 1 x M12; coding: A; Contacts: gold-plated

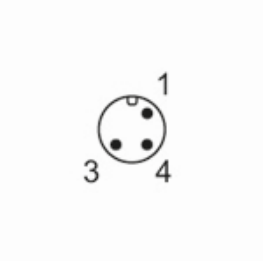


### Connection

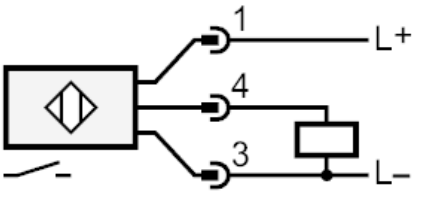


## Diagrams and graphs

Installation

