# DATASHEET - LS-XW-ZBZ



**Actuator, angled**

| | |
|---|---|
| **Part no.** | **LS-XW-ZBZ** |
| **Catalog No.** | **106839** |
| **Eaton Catalog No.** | **LS-XW-ZBZ** |
| **EL-Nummer (Norway)** | **0004356183** |

## Delivery program

| | | | |
|---|---|---|---|
| Basic function | | | actuators |
| Part group reference | | | LS…ZBZ/X |
| Function | | | Angled actuator |
| Description | | | Short<br>Stainless steel |
| For use with | | | For swing doors above 350 mm width |
| **Notes** for combination with LS-...ZBZ/X basic devices<br>From width: 350 mm | | | |

## Technical data

### General

| | | | |
|---|---|---|---|
| Standards | | | IEC/EN 60947 |
| Climatic proofing | | | Damp heat, constant, to IEC 60068-2-78; damp heat, cyclical, to IEC 60068-2-30 |
| Mounting position | | | As required |
| Terminal capacities | | $mm^2$ | |
| Solid | | $mm^2$ | 1 x (0.75 - 2.5)<br>2 x (0.75 - 1.5) |
| Flexible with ferrule | | $mm^2$ | 1 x (0.5 - 1.5)<br>2 x (0.5 - 1.5) |

### Contacts/switching capacity

| | | | |
|---|---|---|---|
| Rated impulse withstand voltage | $U_{imp}$ | V AC | 4000 |
| Rated insulation voltage | $U_i$ | V | 400 |
| Overvoltage category/pollution degree | | | III/3 |
| Rated operational current | $I_e$ | A | |
| AC-15 | | | |
| 24 V | $I_e$ | A | 6 |
| 220 V 230 V 240 V | $I_e$ | A | 6 |
| 380 V 400 V 415 V | $I_e$ | A | 4 |
| DC-13 | | | |
| 24 V | $I_e$ | A | 3 |
| 110 V | $I_e$ | A | 0.8 |
| 220 V | $I_e$ | A | 0.3 |
| Supply frequency | | Hz | max. 400 |
| Short-circuit rating to IEC/EN 60947-5-1 | | | |
| max. fuse | | A gG/gL | 6 |
| Repetition accuracy | | mm | 0.02 |

### Mechanical variables

| | | | |
|---|---|---|---|
| Mechanical shock resistance (half-sinusoidal shock, 20 ms) | | | |
| Standard-action contact | | g | 10 |
| Operating frequency | Operations/h | | ≦ 800 |

### Actuation

| | | | |
|---|---|---|---|
| Mechanical | | | |
| Mechanical holding force acc. to GS-ET-19 (04/2004) | | | |
| XG, XW, XNG | | N | 1700 |
| XWA, XFG, XF | | N | 1600 |
| XNW | | N | 1200 |
| Electromechanical | | | |
| For magnet | | | |

| | | | |
|---|---|---|---|
| Power consumption | | | |
| at 120 V AC | | VA | 8 |
| at 24 V DC | | W | 8 |
| Pick-up and drop-out values | | x $U_s$ | 0.85 - 1.1 |
| Magnet duty factor | | % ED | 100 |

## Design verification as per IEC/EN 61439

| | | | |
|---|---|---|---|
| Technical data for design verification | | | |
| Rated operational current for specified heat dissipation | $I_n$ | A | 0 |
| Heat dissipation per pole, current-dependent | $P_{vid}$ | W | 0 |
| Equipment heat dissipation, current-dependent | $P_{vid}$ | W | 0 |
| Static heat dissipation, non-current-dependent | $P_{vs}$ | W | 0 |
| Heat dissipation capacity | $P_{diss}$ | W | 0 |
| Operating ambient temperature min. | | °C | -25 |
| Operating ambient temperature max. | | °C | 40 |
| IEC/EN 61439 design verification | | | |
| 10.2 Strength of materials and parts | | | |
| 10.2.2 Corrosion resistance | | | Meets the product standard's requirements. |
| 10.2.3.1 Verification of thermal stability of enclosures | | | Meets the product standard's requirements. |
| 10.2.3.2 Verification of resistance of insulating materials to normal heat | | | Meets the product standard's requirements. |
| 10.2.3.3 Verification of resistance of insulating materials to abnormal heat and fire due to internal electric effects | | | Meets the product standard's requirements. |
| 10.2.4 Resistance to ultra-violet (UV) radiation | | | Please enquire |
| 10.2.5 Lifting | | | Does not apply, since the entire switchgear needs to be evaluated. |
| 10.2.6 Mechanical impact | | | Does not apply, since the entire switchgear needs to be evaluated. |
| 10.2.7 Inscriptions | | | Meets the product standard's requirements. |
| 10.3 Degree of protection of ASSEMBLIES | | | Does not apply, since the entire switchgear needs to be evaluated. |
| 10.4 Clearances and creepage distances | | | Meets the product standard's requirements. |
| 10.5 Protection against electric shock | | | Does not apply, since the entire switchgear needs to be evaluated. |
| 10.6 Incorporation of switching devices and components | | | Does not apply, since the entire switchgear needs to be evaluated. |
| 10.7 Internal electrical circuits and connections | | | Is the panel builder's responsibility. |
| 10.8 Connections for external conductors | | | Is the panel builder's responsibility. |
| 10.9 Insulation properties | | | |
| 10.9.2 Power-frequency electric strength | | | Is the panel builder's responsibility. |
| 10.9.3 Impulse withstand voltage | | | Is the panel builder's responsibility. |
| 10.9.4 Testing of enclosures made of insulating material | | | Is the panel builder's responsibility. |
| 10.10 Temperature rise | | | Not applicable. |
| 10.11 Short-circuit rating | | | Is the panel builder's responsibility. The specifications for the switchgear must be observed. |
| 10.12 Electromagnetic compatibility | | | Is the panel builder's responsibility. The specifications for the switchgear must be observed. |
| 10.13 Mechanical function | | | The device meets the requirements, provided the information in the instruction leaflet (IL) is observed. |

## Technical data ETIM 7.0

| | | | |
|---|---|---|---|
| Sensors (EG000026) / Actuator for position switch with separate actuator (EC001487) | | | |
| Electric engineering, automation, process control engineering / Binary sensor technology, safety-related sensor technology / Position switch / Actuator for position switch with separate actuator (ecl@ss10.0.1-27-27-06-05 [BAA078012]) | | | |
| Model | | | Actuator with vertical mounting |

## Approvals

| | | | |
|---|---|---|---|
| Product Standards | | | IEC/EN 60947-5; UL 508; CSA-C22.2 No. 14; CE marking |
| UL File No. | | | E29184 |
| UL Category Control No. | | | NKCR |
| CSA File No. | | | 12528 |
| CSA Class No. | | | 3211-03 |
| North America Certification | | | UL listed, CSA certified |

## Dimensions

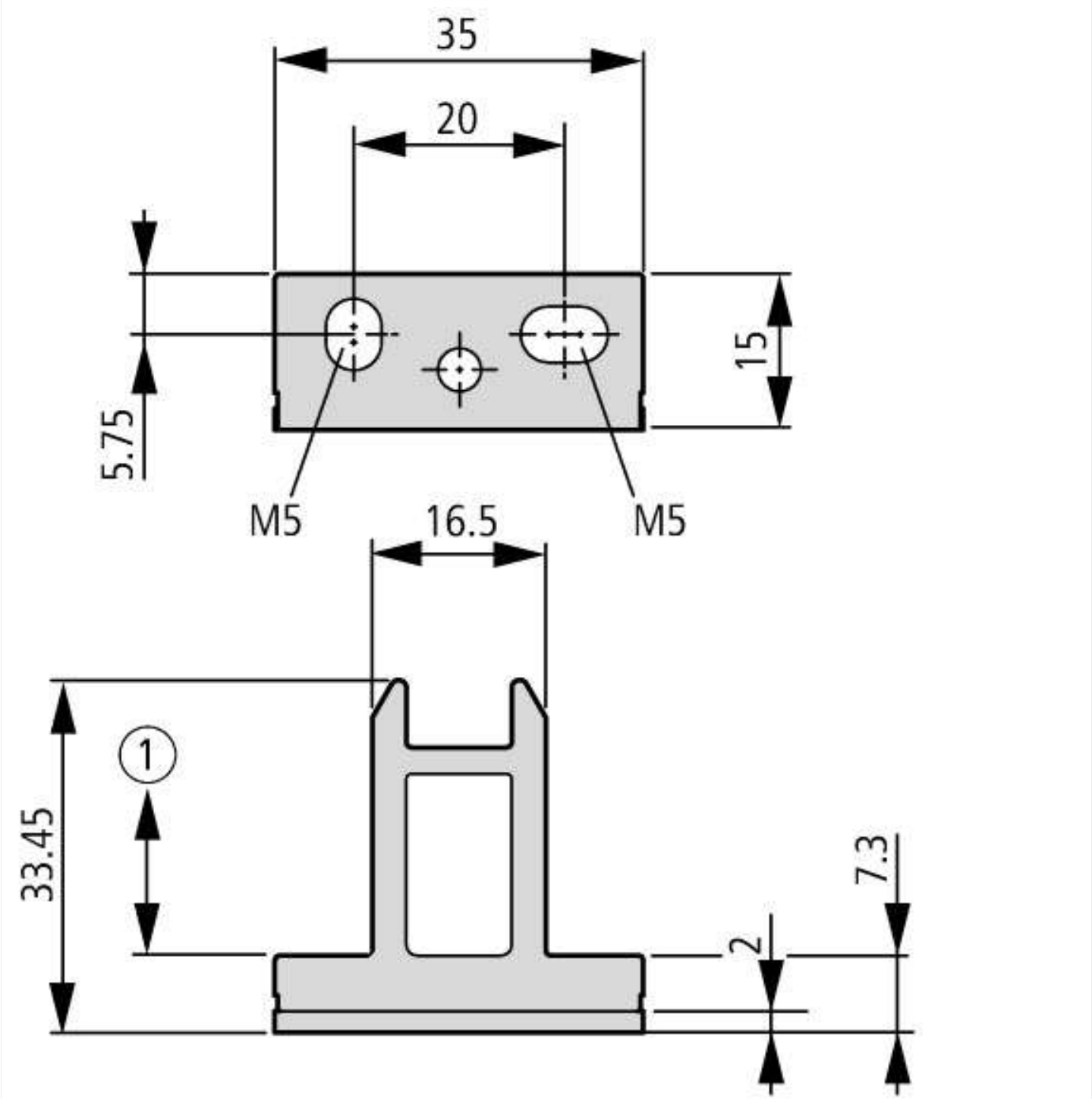


① Distance to device head = 0.1 … 3.0 mm

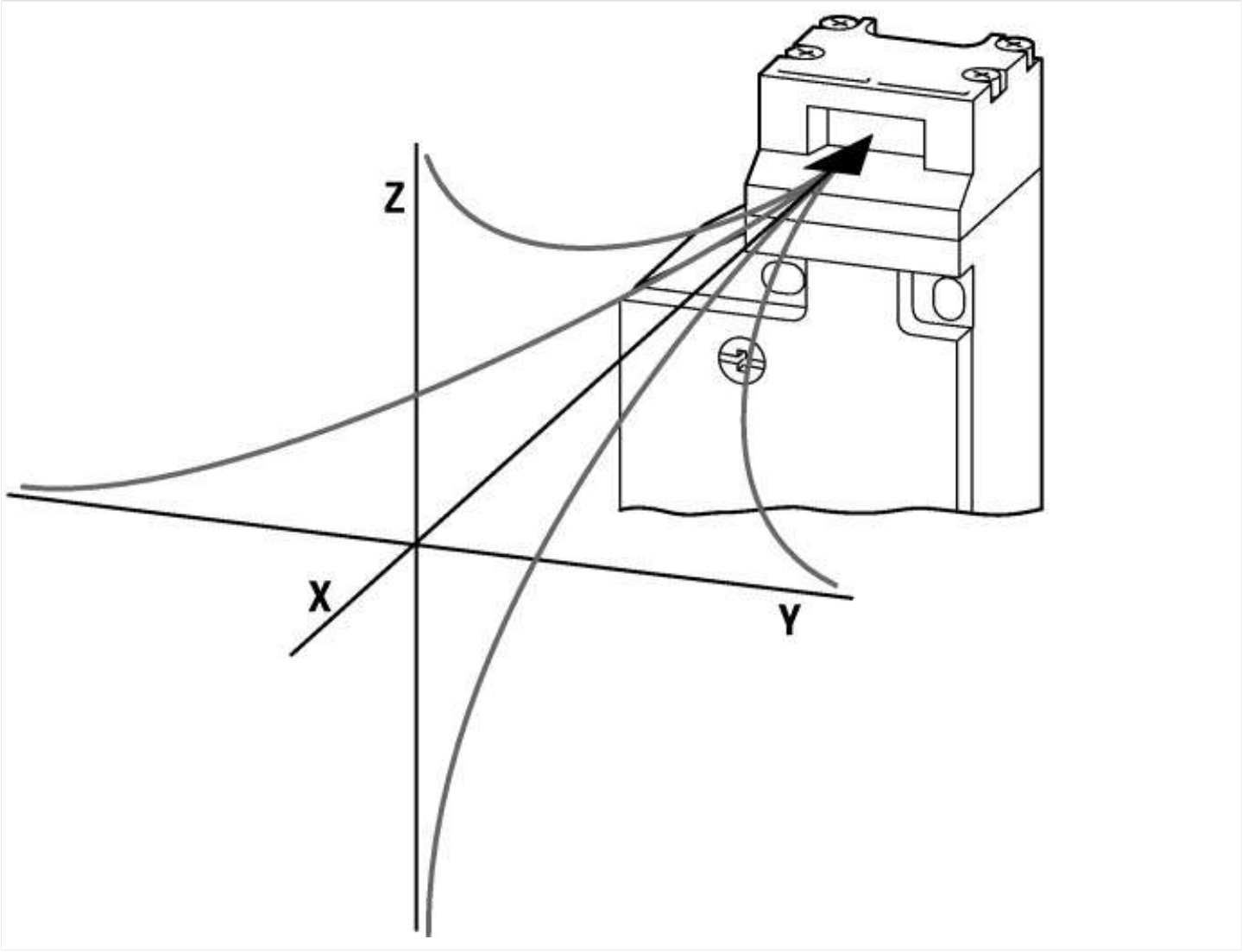


## Additional product information (links)

| IL05208005Z (AWA1310-2354) Safety position switch | |
|---|---|
| IL05208005Z (AWA1310-2354) Safety position switch | ftp://ftp.moeller.net/DOCUMENTATION/AWA_INSTRUCTIONS/IL05208005Z2018_05.pdf |


© 11/2018 by Eaton Industries GmbH