Part Number: BU-00260
Description: Adapter-BNC Female to Double Banana Plug

3707

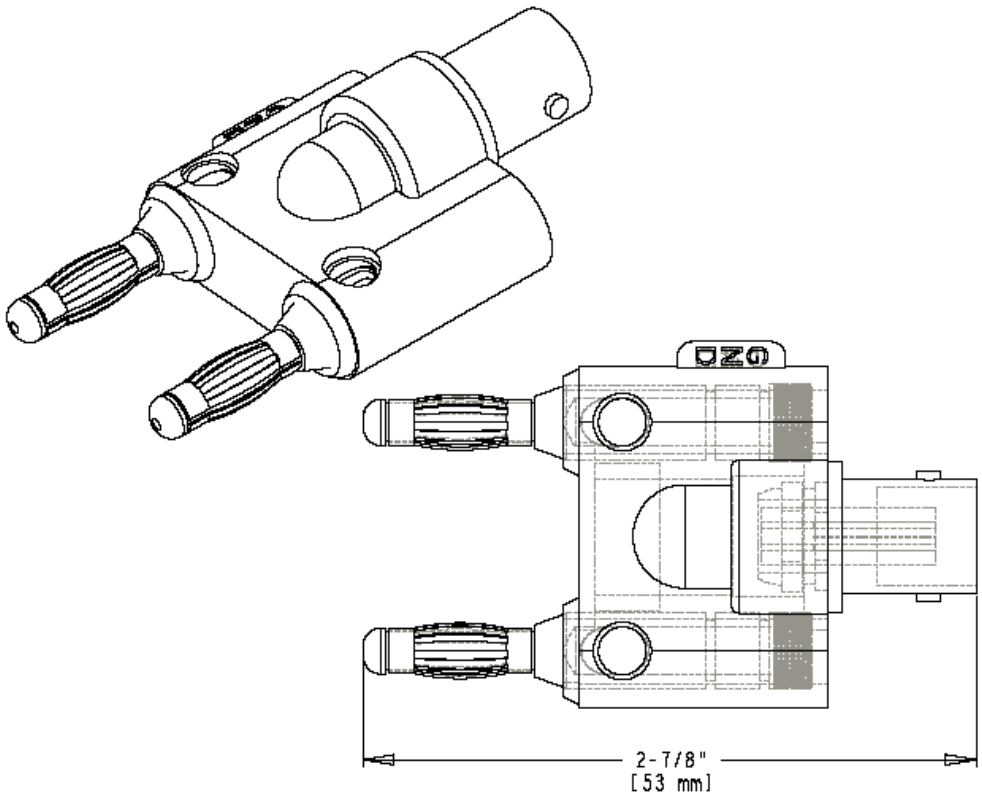

- Adapter-BNC Female to Double Banana Plug
- Allow BNC male connector to be used with equipment having banana jacks; Ideal for adapting laboratory oscilloscopes and signal generator inputs to coaxial cables
- 0.16” (4.11 mm) diameter holes in body give side stackable connections
- Material: BNC: Tarnish resistant plated brass body and gold-plated brass center; Banana plugs: Brass body and beryllium copper nine-leaf springs, nickel-plated; Insulator: Nylon
- Length: 2.10" (53 mm)
- *Std. Colors: -0 Black
- RoHS Compliant

Mueller Electric Company
1625 E. 31st Street
Cleveland, Ohio 44114

ISO 9001:2000
Over 95 Years Of Innovation
www.muellerelectric.com

TEL. 800-955-2629
TEL. 216-771-5225
FAX. 216-771-3068