Electronic Buzzers Installation 118/119 / Accessories

Cap BK



Part No.: 975.118.00

MECHANICAL DATA	
Height	18 mm
Diameter	41 mm
Materials	PC/ABS
Housing colour	Black
Weight with packaging	7 g
Product weight	7 g

APPROVAL DATA	
Conforms with CE	No
Conforms with RoHS directive	Fulfills substance restriction
WEEE	No
Conforms with ATEX-directive	No
Conforms with CCC	No
Conforms with UL	No
Conforms with FCC	No
Conforms with IC	No
EAC certificate available	No
Conforms with UKCA (Importer)	No
Conforms with AS-I	No
ICAO Certification	No
Conforms with DNV	No
Conforms with RoHS CN	No

! For additional installation and mounting information, refer to the appropriate user guide at www.werma.com. This printed copy is for information only and is subject to alteration.

Electronic Buzzers Installation 118/119 / Accessories

Cap BK

DRAWING

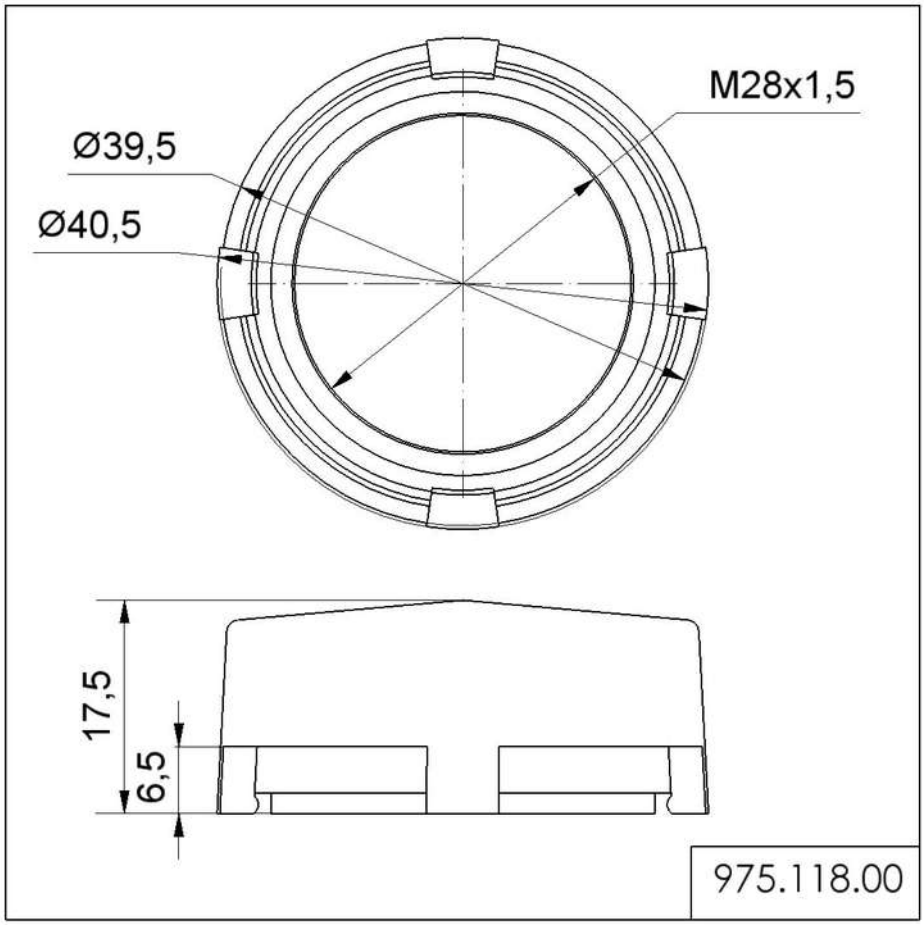

! For additional installation and mounting information, refer to the appropriate user guide at www.werma.com. This printed copy is for information only and is subject to alteration.