E30391

IO-Link display

IO-Link DISPLAY 1,44"

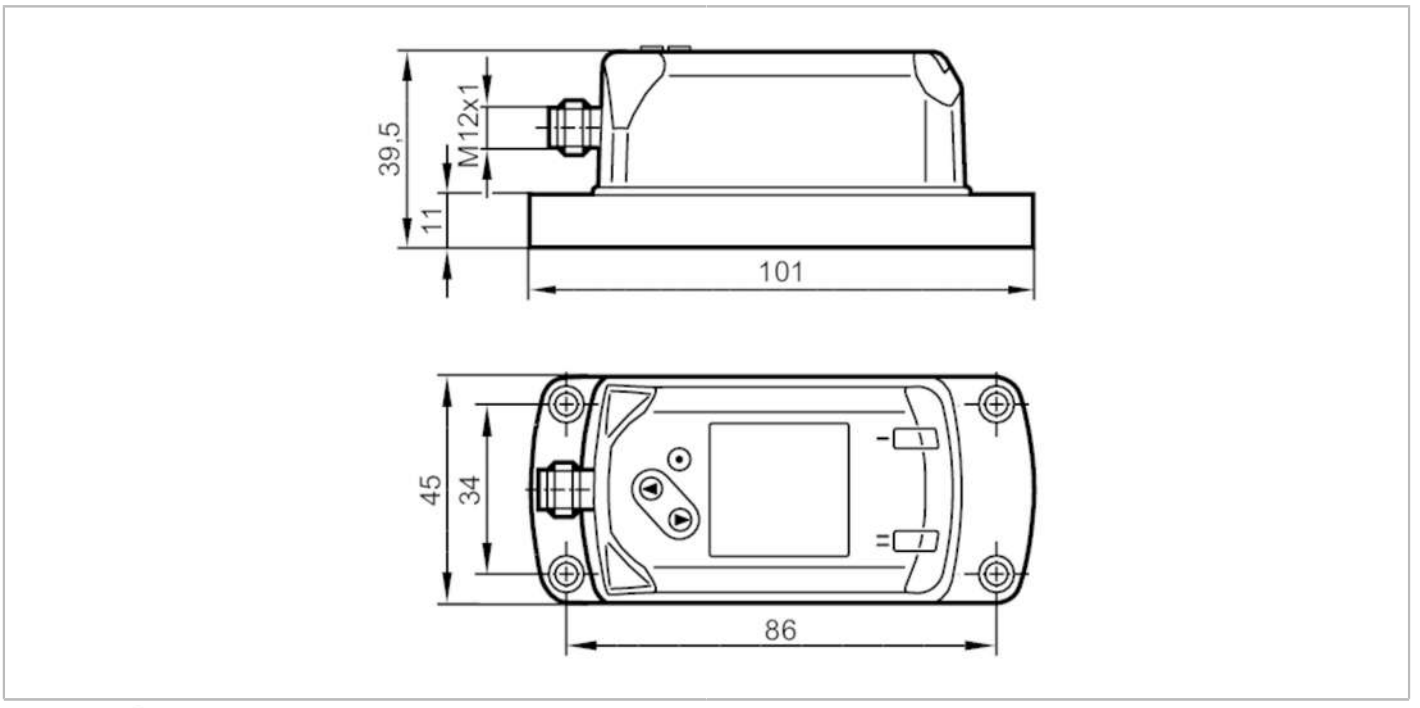

Application		
Special feature		Gold-plated contacts
Application		display for freely definable process values, texts and messages assigned from the controller
Electrical data		
Operating voltage	[V]	18...30 DC
Current consumption	[mA]	< 47
Min. insulation resistance	[MΩ]	100; (500 V DC)
Protection class		III
Reverse polarity protection		yes
Software / programming		
Parameter setting options		display, indication (figure, text, QR code)
Interfaces		
Communication interface		IO-Link
Transmission type		COM2 (38,4 kBaud)
IO-Link revision		1.1
SDCI standard		IEC 61131-9
Profiles		Smart Sensor - SSP 0 / Generic Profiled Sensor
		Function / Device identification
		Function / Process data variable
		Function / Device diagnosis
SIO mode		no
Required master port type		A
Process data binary		6
Min. process cycle time	[ms]	8.4

E30391

IO-Link display

IO-Link DISPLAY 1,44"

Supported DeviceIDs		**Type of operation**	**DeviceID**
		default	681
Operating conditions			
Ambient temperature	[°C]	-10...60	
Storage temperature	[°C]	-20...80	
Protection		IP 65; IP 67	
Tests / approvals			
EMC		DIN EN 61000-6-2	
		DIN EN 61000-6-4	
Shock resistance		DIN EN 60068-2-27	20 g (11 ms)
Vibration resistance		DIN EN 60068-2-6	20 g (10...50 Hz)
MTTF	[years]	5.63	
Mechanical data			
Weight	[g]	174	
Housing		rectangular	
Dimensions	[mm]	86 x 45 x 39.5	
Materials		stainless steel (316L/1.4404); PC; PBT-GF30; PPS; FKM; PA 6.6-GF30	
Displays / operating elements			
Display			colour display 1,44", 128 x 128 pixels
			2 x LED, yellow
Remarks			
Pack quantity		1 pcs.	
Electrical connection			
Connector: 1 x M12; Contacts: gold-plated			