Brand of NTN corporation

Technical data

ESPLE208

Bearing units



Grey cast housing, radial insert ball bearing with eccentric locking collar, single lip seal

KIT CONTENT

ES.208.G2, PLE208

VISUAL (S)

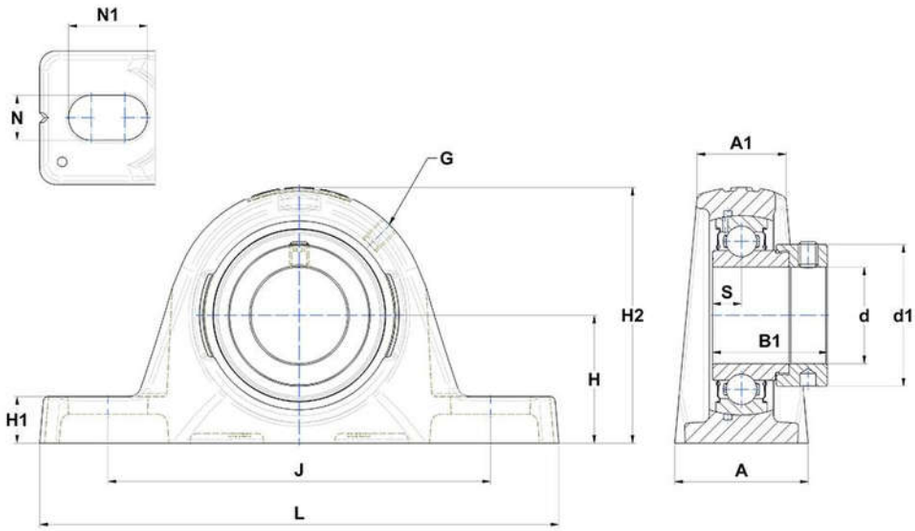

PRODUCT DEFINITION

Brand	SNR
A - Housing width	51 mm
A1 - Housing top width	34,5 mm
B - Width of Inner Ring	30,2 mm
d - Shaft diameter	40 mm
d1 - Outer dia of eccent. Lock. collar / nut of adapter sleeve	58 mm

PRODUCT DEFINITION	
G - Grease fitting	M6x1
H - Distance mounting base to centerline spheric. seating diam.	49,2 mm
H1 - Housing foot height	18,5 mm
H2 - Housing height	98,5 mm
J - Mounting holes distance	137,5 mm
L - Housing length	180,5 mm
N - Mounting hole dimension	14 mm
N1 - Mounting hole length	24,5 mm
S - Distance front side/bearing centre	11 mm

PRODUCT PERFORMANCE	
C - Dynamic load rating	29600000 mN
C0 - Static load rating	18200000 mN
Operating temperature min.	253,15 °K
Operating temperature max.	373,15 °K

OTHER FEATURES	
Mass	1,95 kg
Recommended tightening torque for set screw	11.5 N-m