Forcibly Guided Coupling Relay ZSCoupling

Operating Instructions

English translation

Errors and technical changes reserved

Correct use

ZSCoupling is a coupling relay with forcibly guided contacts according to EN 61810-3, which can be used in safety-related applications according to EN ISO 13849-1 and EN 62061 / EN 61508 up to PL c or SIL 1.

The ZSCoupling couples safe signals of e.g. pulsed PLC's to the periphery for galvanic isolation and power adjustment and can also used for contact expansion of a safety relay such as from the ZANDER SR series.

EN ISO 13849-1

IEC 62061
IEC 61511
IEC 61508

- *Forcibly guided relay contacts according to EN 61810-3*
- *3 NO / 1NC*
- *High Power - variant for high loads at high temperatures available*
- *Coupling of safe signals for galvanically isolated power adjustment*
- *Contact expansion for safety relays*
- *Display of the switching status via LED*
- *Suitable for safety applications up to PL c (EN ISO 13849-1), SIL 1 (EN 62061 / EN 61508)*

Function

When the control signal is switched on at A1/A2, the positively driven relay of ZSCoupling is activated, whereby the NO enable current paths (13-14, 23-24, 33-34) are immediately closed. By disconnecting the control signal, the relays are deactivated, whereby the NO enable current paths open immediately.

The integration of the NC feedback current path (41-42) into a feedback circuit of the controlling unit ensures that a non-opening of an enable current path is detected, whereby the controlling unit takes measures for interlocked shutdown depending on the application.

CAUTION:
The use of the ZSCoupling requires that the control as well as the monitoring is carried out by a safety component suitable for the respective safety function. The sole use of ZSCoupling in safety-related applications is not permitted.

A free-wheeling diode built into the ZSCoupling protects the driving unit from overload. Two support terminals for A1 and A2 allow easy wiring in case of cascading several ZSCoupling.

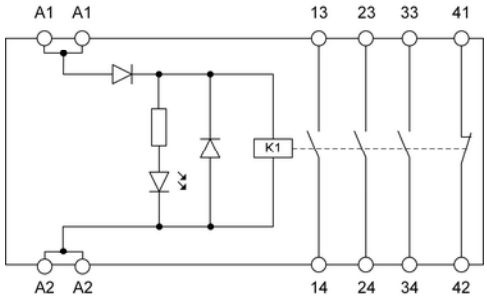

Fig 1 Block diagram ZSCoupling

Installation

- In accordance with EN 60204-1, the device is intended for installation in control cabinets with minimum protection class IP54. The following must be observed:
- Mounting on 35 mm mounting rail according to EN 60715
- Ensure sufficient heat dissipation in the control cabinet
- Minimum distance to adjacent devices according to cumulative current limit curve

Note: Spacer from ZANDER AACHEN (Art. No. 472596) for defined distances - See section Accessories

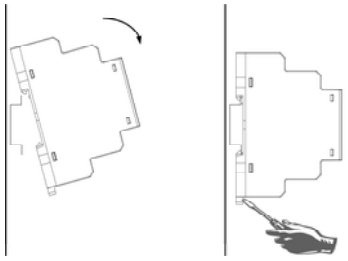

Fig. 2 Mounting / Demounting

Safety Precautions

- Installation and commissioning of the device must be performed **only by authorized personnel**.
- Observe the country-specific regulations when installing the device.
- The electrical connection of the device is only allowed to be made with the device isolated.
- The wiring of the device must comply with the instructions in this user information, otherwise there is a risk that the safety function will be lost.
- It is not allowed to open the device, tamper with the device or bypass the safety devices.
- Contact protection and insulation of the supply lines must be designed for the highest voltage applied to the device.
- All relevant safety regulations and standards are to be observed.
- The overall concept of the control system in which the device is incorporated must be validated by the user.
- Failure to observe the safety regulations can result in death, serious injury and serious damage.
- Note down the version of the product (see label "Ver.") and check it prior to every commissioning of a new device. If the version has changed, the overall concept of the control system in which the device is incorporated must be validated again by the user.

Electrical Connection

- Consider the information in the section "Techn. data"
- External fusing of the safety contacts must be provided
- Max. line resistance at nominal voltage is 100 Ω
- Feedback contact 41-42 must not be used as safety contact
- If the device does not function after commissioning, it must be returned to the manufacturer unopened. Opening the device will void the warranty
- Sufficient protective circuitry for inductive loads (e.g. free-wheeling diode) must be provided

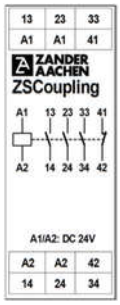

Fig. 3 Terminals

A1:	*Control signal- DC 24V*
A2 :	*Reference potential - 0V*
13-14:	*Enable current path 1*
23-24:	*Enable current path 2*
33-34:	*Enable current path 3*
41-42:	*Feedback current path*

R01
Ver. A
E61-061-00

H. ZANDER GmbH & Co. KG • Am Gut Wolf 15 • 52070 Aachen • Deutschland
Tel +49 (0)241 9105010 • Fax +49 (0)241 91050138 • info@zander-aachen.de • www.zander-aachen.de

Applications

ZSCoupling as single-channel coupling relay for safe PLC output

The device has to be wired as shown in Fig. 4 or Fig. 5

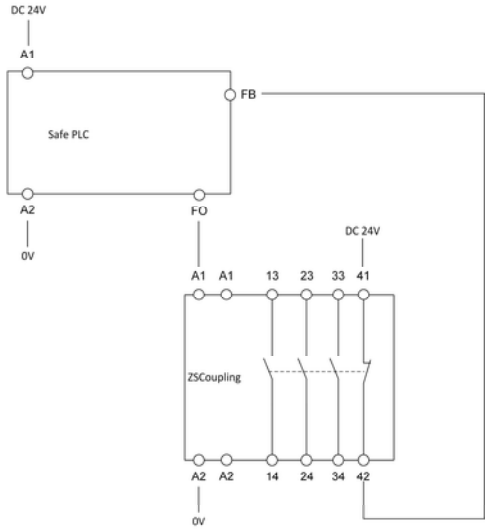

Fig 4:
Single-channel control with safe PLC output.
(Application up to PL c / SIL 1 if the safe output fulfills at least PL c / SIL 1, the ZSCoupling is monitored via the feedback circuit 41 - 42 and cross-circuits in the control line can be excluded - see note).

Attention:
Enable current paths switch immediately when the switching voltage is applied.

Note:
For fault exclusion of cross-connections according to EN ISO 13849-2, wiring must be in a protected wiring compartment with minimum protection class IP54.
E.g. EN ISO 13849-2, Tab. D4 - Wiring within an electrical installation space according to EN 60204-1.

Monitoring of the ZSCoupling via the feedback contact 41 - 42 is mandatory.

ATTENION:

- *The 0V - potential of the PLC and the ZSCoupling must be the same reference potential*
- *It must be ensured that any switch-on pulses sent by the PLC do not cause the ZSCoupling to activate and should therefore always be deactivated.*

ZSCoupling as single-channel expansion module for safety relays

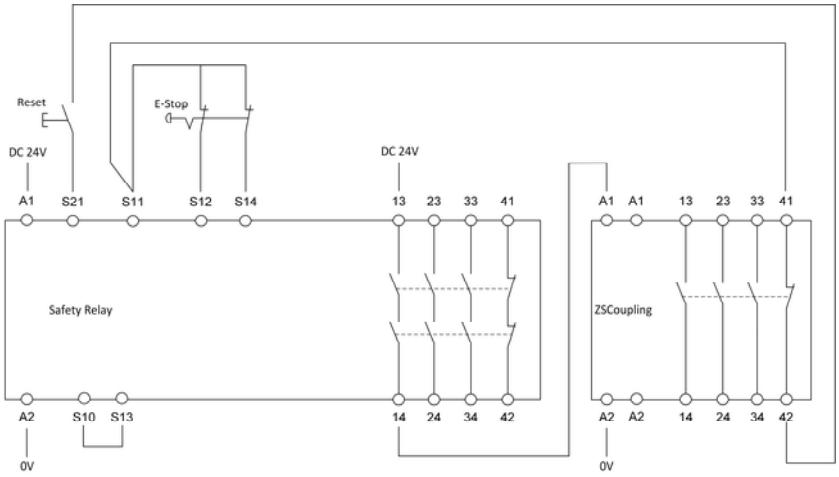

Fig. 5:
Wiring for contact expansion of a basic device (e.g. SR3C).
(Up to PL c / SIL 1 if the safety relay fulfills PL c / SIL 1 and cross-connections in the control line can be excluded - see note)

Attention: Relay contacts switches immediately when the switching voltage is applied.

Note:
For fault exclusion of cross-connections according to EN ISO 13849-2, wiring must be in a protected wiring compartment with minimum protection class IP54. E.g. EN ISO 13849-2, Tab. D4 - Wiring within an electrical installation space according to EN 60204-1.

Monitoring of the ZSCoupling via the feedback contact 41 - 42 is mandatory.

Commissioning Procedure

Note: Follow the guidelines in *„Electrical Connection“* during the start-up.

1. Wiring feedback loop:
Integrate the feedback contact into the feedback loop of the controlling unit - see figure 4 or figure 5 depending on the application.

2. Wiring control signal:
Connect the control signal to terminal A1 and A2 to the corresponding reference potential - see figure 4 or figure 5 depending on the application.

Attention:
Wiring only in the de-energized state.

3. Activate the device
Activate the ZSCoupling via A1.

Attention:
Relay contacts switches immediately when the switching voltage is applied. The LED in the front lit.

4. Deactivate the device
Deactivate the ZSCoupling via A1. The ELD in the front turns off.

5. Restart:
Restart the ZSCoupling via A1.The LED in the front lit.

H. ZANDER GmbH & Co. KG • Am Gut Wolf 15 • 52070 Aachen • Deutschland
Tel +49 (0)241 9105010 • Fax +49 (0)241 91050138 • info@zander-aachen.de • www.zander-aachen.de

Checks and maintenance

The following checks are regulary required to ensure proper and continuous functioning

- Check the switching function
- Check for signs of manipulation and safety function bypassing
- Check if the device is mounted and connected securely
- Check for soiling

Check if the safety device is working properly, in particular:

- Every time after initial commissioning
- Every time after replacing a component
- After every fault in the safety circuit

Regardless of this, the safe functioning of the safety device should be checked at suitable intervals, e.g. as part of the maintenance schedule of the plant. Not maintenance ist required for the device itself.

What to do in Case of a Fault?

Device does not switch on:

- *Check the wiring by comparing it to the wiring diagrams*
- *Check the control line at A1*
- *Check Feedback loop*
- *Check reference potential*

If the fault still exists, perform the steps listed under “Commissioning Procedure”.

If these steps do not remedy the fault either, return the device to the manufacturer for examination.

Opening the device is impermissible and will void the warranty.

Proof-Test



In order to check the proper function of the device, the following steps have to be carried out

- Deactivate the ZSCoupling. Check that the contacts (13-14 to 33-34) are opened by disabling and the monitoring contact 41-42 is closed
- Now reactivate the device. Check that the contacts (13-14 to 33-34) are closed again and the monitoring contact 41-42 is open.

If one of the above switching states is not present, the proof test is failed.

ATTENTION: If the proof test is not passed, it is mandatory to replace the device. Otherwise, there is a risk of loss of functional safety.

Techn. Data

Basic component, suitable for safety applications according to the following standards	EN ISO 13849-1; EN 62061; IEC 61508 Parts 1-2 und 4-7; IEC 61511-1
Power consumption	A1/A2 = DC 24 V: approx. 0.8W
Control voltage	DC 24 V - 15 % / + 10%
Max. leakage current at „0“	5 mA
Filtering of test pulses at nominal voltage DC 24V Switch-off pulses (Pulse width / Pulse rate)	 ≤ 2 ms / ≥ 50 ms
Number NO contacts	3
Number NC contacts	1
Max. switching voltage	AC 250 V
NO breaking capacity (13-14, 23-24, 33-34) (6 switching cycles / min)	AC: 250 V, 2000 VA, 8 A for DC-1 250 V, 3 A for AC-15 DC: 30 V, 240 W, 8 A for DC-1 24 V, 3 A for DC-13
Max. thermal total current I_{th}	See total current limit curve
NC breaking capacity (41-42)	AC: 250 V, 500 VA, 2 A für DC-1 DC: 30 V, 60 W, 2 A für DC-1
Min. contact load	5 V, 10 mA
External fuses NO / NC	10 A gG / 4 A gG
Wire width	0.14 - 2.5 mm^2
Tightening moment (Min. / Max.)	0.5 Nm / 0.6 Nm
Typ. switch-on delay / switch-off delay of NO Contacts (13-14, 23-24, 33-34)	< 25 ms / < 40 ms (A1/A2 = DC 24 V)
Max. line resistance at nominal voltage	100 Ω
Contact material	$AgSnO_2$
Service life	mech. 1 x 10^7 cycles
Dielectric strength (EN 60664-1)	800V: Basic strength for SELV/PELV circuit (A1, A2, 41, 42) 6kV: Safe strength, reinforced insulation between relay contacts (13-14, 23-24, 33-34) and SEL/PELV circuit (A1, A2, 41, 42)
Rated insulation voltage	50V: SELV/PELV circuit (A1, A2, 41, 42) 250V: Between relay contacts (13-14, 23-24, 33-34) and SELV/PELV circuit(A1, A2, 41, 42)
Protection	IP20
Ambient temperature range	-15 °C to +55 °C (See total current limit curve)
Max. altitude	≤ 2000 m (above sea level)
Degree of pollution / Overvoltage category	2 / 3 (DIN VDE 0110-1)
Weight	approx. 70 g
Mounting	DIN rail according to EN 60715 TH35

H. ZANDER GmbH & Co. KG • Am Gut Wolf 15 • 52070 Aachen • Deutschland
Tel +49 (0)241 9105010 • Fax +49 (0)241 91050138 • info@zander-aachen.de • www.zander-aachen.de

Disclaimer and warranty

If the above mentioned conditions for appropriate use are not complied with or if the safety instructions are not followed or if any maintenance operations are not carried out as required, this shall lead to an exclusion of liability and loss of warranty.

ATTENTION!

We would like to point out that it is the full responsibility of the operator to ensure a plant availability. Using the ZSCoupling in safety applications the safey state „Energy Switched Off“ is established if requested by the controlling device.

This means that the connected load is switched off as soon as a request from connected sensor elements or diagnostic measures detects a dangerous state, e.g. caused by a component fault.

Since process-related applications in particular have high demands on availability, limited availability can also have significant consequences. It is therefore recommended to stock a second unit to avoid long downtimes in such a case. These are recommendations of the manufacturer, the evaluation of the importance of the plant availability is the sole responsibility of the operator.

Total Current Lmit Curve

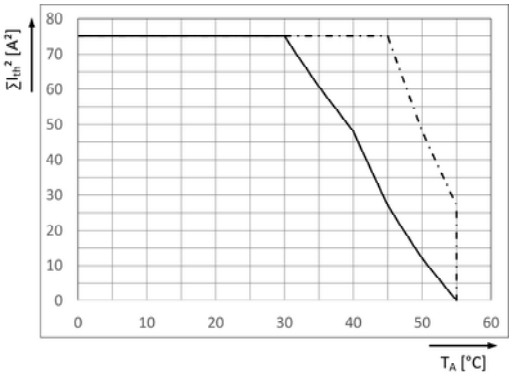

Fig 6: Total current limit curve ZSCoupling

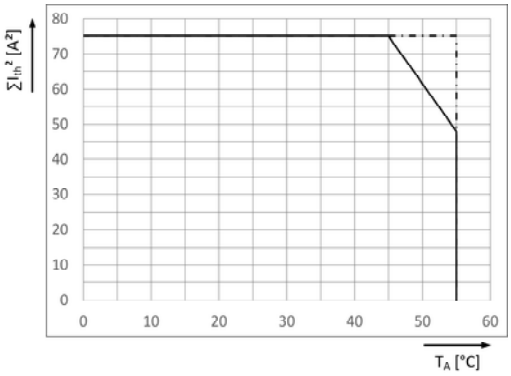

Fig. 7: Total current limit curve ZSCoupling HP

Fig. 6 and Fig. 7 shows the total current limit curves for ZSCoupling (Fig. 6) and ZSCoupling HP (Fig. 7).

——— 0 mm distance to adjacent devices with the same power dissipation
– · – · 5 mm distance to adjacent devices with the same power dissipation

Total current: $\sum I_{th}^2 = I_1^2 + I_2^2 + I_3^2$ (I_1, I_2, I_3: Current over contacts 13-14, 23-24, 33-34)

Dimension Drawing

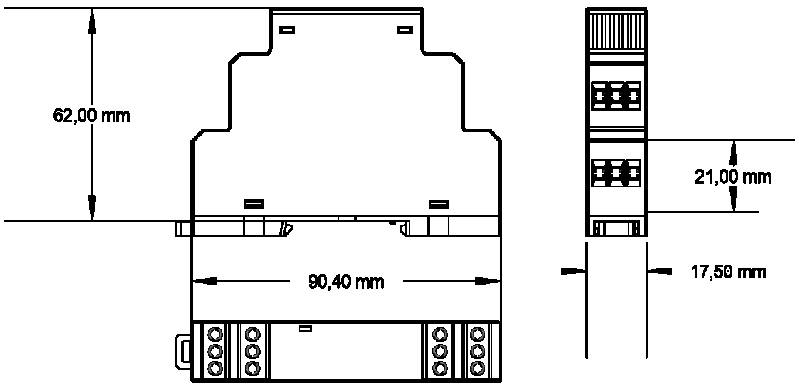

Variants

Order-No. 456020	ZSCoupling, DC 24 V	fixed screw terminals
Order-No. 456030	ZSCoupling HP, DC 24V	fixed screw terminals

Accessories

Order-No. 472596	Spacer Electric Cabinetrail spacer 5mm, PU = 12 pcs

H. ZANDER GmbH & Co. KG • Am Gut Wolf 15 • 52070 Aachen • Deutschland
Tel +49 (0)241 9105010 • Fax +49 (0)241 91050138 • info@zander-aachen.de • www.zander-aachen.de

Safety Characteristics

$B10_d$ - values

$B10_d$ values [cycles] - AC-15	I ≤ 1A	I ≤ 2 A 400.000	I ≤ 3 A 400.000
$B10_d$ values [cycles] - DC-13	I ≤ 1A	I ≤ 2 A 450.000	I ≤ 3 A 450.000

Safety parameters according to EN ISO 13849-1

Load - AC-15 / DC-13	**≤ 1 A / ≤ 1 A**	**≤ 2 A / ≤ 2 A**	**≤ 3 A / ≤ 3 A**
Max. duration of use [Years]	20	20	20
Proof-Test-Intervall [Years]	1	1	1
PFH [1/h]	c	c	c
SIL	1.14E-06	1.14E-06	1.14E-06
nop [Cycles / year] - AC-15 / DC-13	≤ 20,000 / ≤ 100,000	≤ 20,000 / ≤ 22,500	≤ 20,000 / ≤ 22,500

Safety parameters according to IEC 61508 - High Demand

Type	A
HFT	0
SIL	1
SFF [%]	50
λ_{SD} [FIT]	0
λ_{SU} [FIT]	571
λ_{DD} [FIT]	0
λ_{DU} [FIT]	571
PFH [1/h]	5.71E-07

Load - AC-15 / DC-13	**≤ 1 A / ≤ 1 A**	**≤ 2 A / ≤ 2 A**	**≤ 3 A / ≤ 3 A**
nop [Cycles / year] - AC-15 / DC-13	≤ 20,000 / ≤ 100,000	≤ 20,000 / ≤ 22,500	≤ 20,000 / ≤ 22,500

Safety parameters according to IEC 61508 - Low Demand

Type	A
HFT	0
SIL	1
SFF [%]	50
λ_{SD} [FIT]	0
λ_{SU} [FIT]	250
λ_{DD} [FIT]	0
λ_{DU} [FIT]	250
PFD_{avg} (e.g. for T = 1 year)	1,1E-03
PTI (Proof-Test Intervall) [year]	13

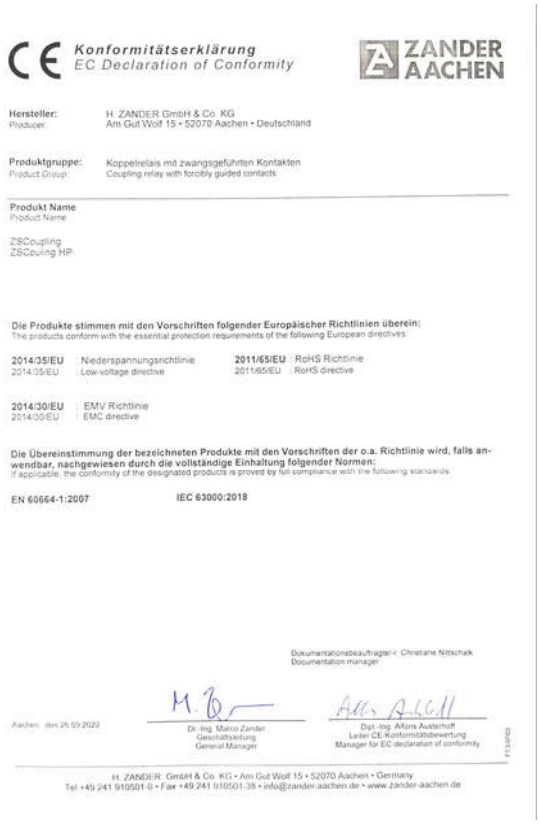

CE Konformitätserklärung
EC Declaration of Conformity

ZANDER AACHEN

Hersteller: / Producer: H. ZANDER GmbH & Co. KG, Am Gut Wolf 15 • 52070 Aachen • Deutschland

Produktgruppe: / Product Group: Koppelrelais mit zwangsgeführten Kontakten / Coupling relay with forcibly guided contacts

Produkt Name / Product Name: ZSCoupling, ZSCouling HP

Die Produkte stimmen mit den Vorschriften folgender Europäischer Richtlinien überein:
The products conform with the essential protection requirements of the following European directives:

2014/35/EU : Niederspannungsrichtlinie / Low-voltage directive
2011/65/EU : RoHS Richtlinie / RoHS directive
2014/30/EU : EMV Richtlinie / EMC directive

Die Übereinstimmung der bezeichneten Produkte mit den Vorschriften der o.a. Richtlinie wird, falls anwendbar, nachgewiesen durch die vollständige Einhaltung folgender Normen:
If applicable, the conformity of the designated products is proved by full compliance with the following standards:

EN 60664-1:2007
IEC 63000:2018

Dokumentationsbeauftragte(r): Christiane Nitschak
Documentation manager

Aachen, den 26.09.2022

Dr.-Ing. Marco Zander, Geschäftsleitung / General Manager

Dipl.-Ing. Alfons Austerhoff, Leiter CE-Konformitätsbewertung / Manager for EC declaration of conformity

H. ZANDER GmbH & Co. KG • Am Gut Wolf 15 • 52070 Aachen • Germany
Tel +49 241 910501-0 • Fax +49 241 910501-38 • info@zander-aachen.de • www.zander-aachen.de

R01
Ver. A
E61-061-00