ebm-papst Mulfingen GmbH & Co. KG
Bachmühle 2
D-74673 Mulfingen
Phone +49 (0) 7938 81-0
Fax +49 (0) 7938 81-110
info1@de.ebmpapst.com
www.ebmpapst.com

CONTENTS

1. SAFETY REGULATIONS AND NOTES 1
1.1 Levels of hazard warnings 1
1.2 Staff qualification 1
1.3 Basic safety rules 1
1.4 Electrical voltage 1
1.5 Safety and protective functions 2
1.6 Electromagnetic radiation 2
1.7 Mechanical movement 2
1.8 Emission 2
1.9 Hot surface 2
1.10 Storage 2
1.11 Disposal 2
2. PROPER USE 3
3. TECHNICAL DATA 4
3.1 Product drawing 4
3.2 Nominal data 5
3.3 Technical features 5
3.4 Mounting data 5
3.5 Transport and storage conditions 5
3.6 Electromagnetic compatibility 5
4. CONNECTION AND START-UP 6
4.1 Connecting the mechanical system 6
4.2 Connecting the electrical system 6
4.3 Connection of the cables 6
4.4 Connection screen 7
4.5 Checking the connections 8
4.6 Switch on device 8
4.7 Switching off the device 8
5. INTEGRATED PROTECTIVE FUNCTIONS 8
6. MAINTENANCE, MALFUNCTIONS, POSSIBLE CAUSES AND REMEDIES 9
6.1 Cleaning 9
6.2 Safety test 9

Translation of the original operating instructions

1. SAFETY REGULATIONS AND NOTES

Please read these operating instructions carefully before starting to work with the device. Observe the following warnings to prevent malfunctions or physical damage to both property and people.
These operating instructions are to be regarded as part of this device. If the device is sold or transferred, the operating instructions must accompany it.
These operating instructions may be duplicated and forwarded for information about potential dangers and their prevention.

1.1 Levels of hazard warnings

These operating instructions use the following hazard levels to indicate potentially hazardous situations and important safety regulations:



DANGER
Indicates an imminently hazardous situation which, if not avoided, will result in death or serious injury. Compliance with the measures is mandatory.

WARNING
Indicates a potentially hazardous situation which, if not avoided, could result in death or serious injury. Exercise extreme caution while working.

CAUTION
Indicates a potentially hazardous situation which, if not avoided, may result in minor or moderate injury or damage of property.

NOTE
A potentially harmful situation can occur and, if not avoided, can lead to property damage.

1.2 Staff qualification

Only specialised electrical personnel may install the device, perform the test run and work on the electrical system.
Only trained and authorised specialist personnel are permitted to transport, unpack, assemble, operate or maintain the device, or to use it in any other manner.

1.3 Basic safety rules

Any safety hazards stemming from the device must be re-evaluated once it is installed in the end device.
Observe the following when working on the unit:

⇒ Do not make any modifications, additions or conversions to the device without the approval of ebm-papst.

1.4 Electrical voltage

⇒ Check the electrical equipment of the device at regular intervals, refer to chapter 6.2 Safety test.

⇒ Replace loose connections and defective cables immediately.



DANGER
Electrical load on the device
Risk of electric shock

→ Stand on a rubber mat if you are working on an electrically charged device.

WARNING
Terminals and connections have voltage even with a unit that is shut off
Electric shock

→ Wait five minutes after disconnecting the voltage at all poles before opening the device.

CAUTION
In the event of failure, there is electric voltage at the rotor and impeller
The rotor and impeller are base insulated.

→ Do not touch the rotor and impeller once they are installed.

CAUTION
If control voltage is applied or a speed setpoint is stored, the motor automatically restarts, e.g. after a power failure.
Danger of injury

→ Keep out of the danger zone of the device.

→ When working on the device, switch off the mains supply voltage and secure the latter from being switched on again.

→ Wait until the device stops.

→ After working on the device, remove any used tools or other objects from the device.

1.5 Safety and protective functions



DANGER
Missing safety device and non-functioning safety device
If there is no safety device, you could be seriously injured, for example by reaching into the running device with your hands.

→ Operate the device only with a fixed and isolating safety protection and a fixed guard grille. The guard must withstand the kinetic energy of a fan blade detaching at maximum speed.

→ The device is a built-in component. You, the owner/ operator, are responsible for providing adequate protection for the device.

→ Shut down the device immediately if you detect a missing or ineffective protective feature.

1.6 Electromagnetic radiation

Interference from electromagnetic radiation is possible, e.g. in conjunction with open and closed-loop control devices.
If unacceptable emission intensities occur when the fan is installed, appropriate shielding measures have to be taken by the user.

NOTE
Electrical or electromagnetic interferences after integrating the device in installations on the customer's side.

→ Verify that the entire setup is EMC compliant.

1.7 Mechanical movement



DANGER
Rotating device
Body parts that come into contact with the rotor and impeller can be injured.

→ Secure the device against accidental contact.

→ Before working on the system/machine, wait until all parts have come to a standstill.

WARNING
Rotating device
Long hair, loose items of clothing and jewellery could become entangled and pulled into the device. You could be injured.

→ Do not wear any loose clothing or jewellery while working on rotating parts.

→ Protect long hair by wearing a cap.

1.8 Emission

WARNING
Depending on the installation and operating conditions, a sound pressure level greater than 70 dB(A) may arise.
Danger of noise-induced hearing loss

→ Take appropriate technical safety measures.

→ Protect operating personnel with appropriate safety equipment, e.g. hearing protection.

→ Also observe the requirements of local agencies.

1.9 Hot surface



CAUTION
High temperature at the electronics enclosure
Danger of burn injuries

→ Ensure that sufficient protection against accidental contact is provided.

1.10 Storage

⇒ Store the device, partially or fully assembled, in a dry and weatherproof manner in the original packing in a clean environment.

⇒ Protect the device from environmental impacts and dirt until the final installation.

⇒ We recommend storing the device for a maximum up to one year to guarantee proper operation and longest possible service life.

⇒ Even devices explicitly suited for outdoor use are to be stored as described prior to being commissioned.

⇒ Maintain the storage temperature, see chapter 3.5 Transport and storage conditions.

1.11 Disposal

When disposing of the device, please comply with all relevant requirements and regulations applicable in your country.

Translation of the original operating instructions

ebm-papst Mulfingen GmbH & Co. KG · Bachmühle 2 · D-74673 Mulfingen · Phone +49 (0) 7938 81-0 · Fax +49 (0) 7938 81-110 · info1@de.ebmpapst.com · www.ebmpapst.com

2. PROPER USE

The device is exclusively designed as a built-in device for moving air according to its technical data.
Any other or secondary use is deemed improper and constitutes a misuse of the device.
Installations on the customer's side must meet the mechanical, thermal and service life-related stresses that can occur.

Proper use also includes:

- Moving air with a density of 1.2 kg/m³.
- Using the device in accordance with the permitted ambient temperature, see chapter 3.5 Transport and storage conditions and chapter 3.2 Nominal data.
- Operating the device with all protective features in place.
- Minding the operating instructions.

Improper use

Using the device in the following ways is particularly prohibited and may cause hazards:

- Operating the device with an imbalance, e.g. caused by dirt deposits or icing.
- Moving air that contains abrasive particles.
- Moving highly corrosive air, e.g. salt spray mist. Exceptions are devices that are intended for salt spray mist and protected accordingly.
- Moving air that contains dust pollution, e.g. suctioning off saw dust.
- Operating the device close to flammable materials or components.
- Operating the device in an explosive atmosphere.
- Using the device as a safety component or for taking on safety-related functions.
- Operation with completely or partially disassembled or modified protective features.
- In addition, all application options that are not listed under proper use.

Translation of the original operating instructions

ebm-papst Mulfingen GmbH & Co. KG · Bachmühle 2 · D-74673 Mulfingen · Phone +49 (0) 7938 81-0 · Fax +49 (0) 7938 81-110 · info1@de.ebmpapst.com · www.ebmpapst.com

3. TECHNICAL DATA

3.1 Product drawing

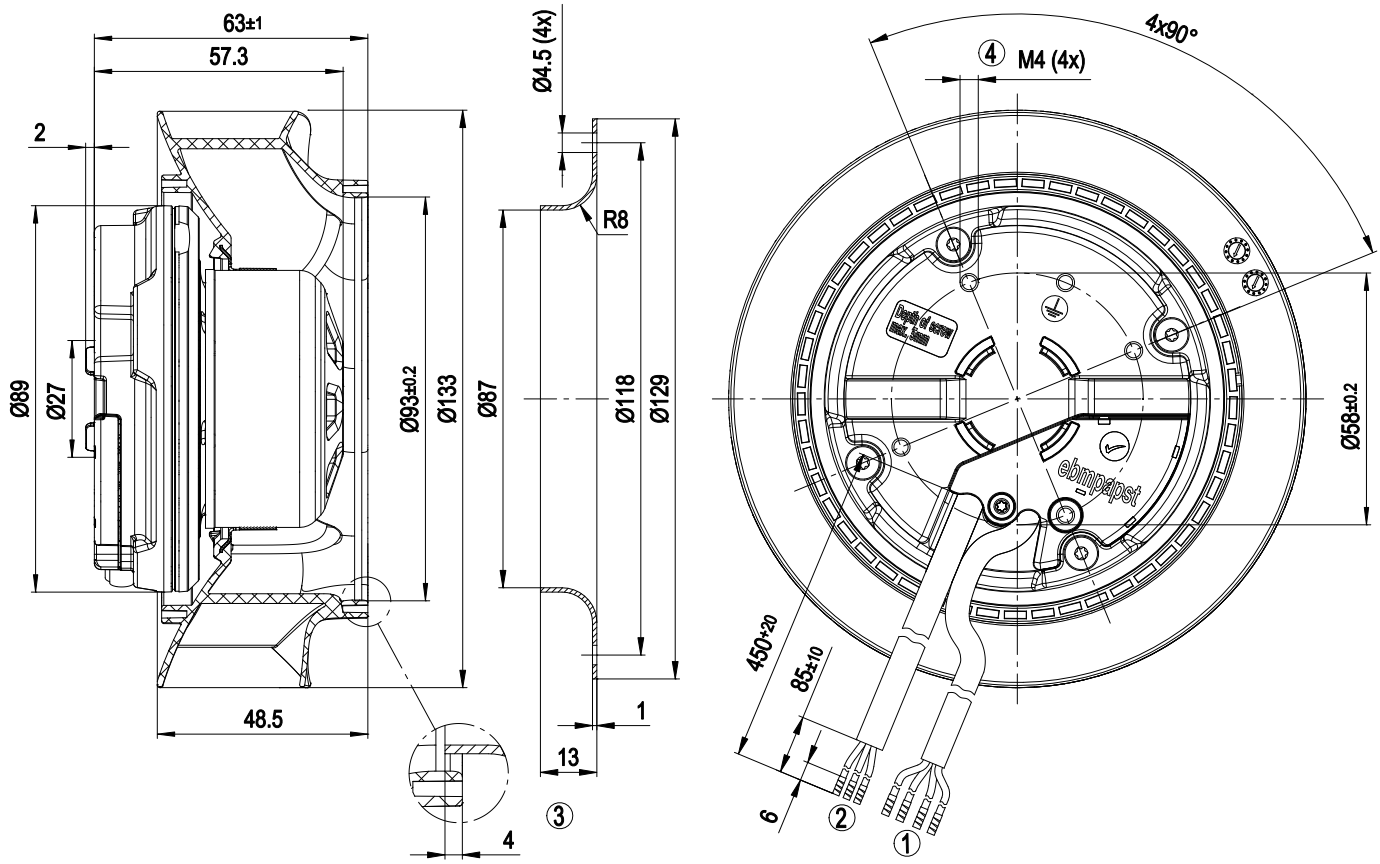

All measures have the unit mm.

1	Control line PVC 4X AWG22, 4 x brass lead tips crimped
2	Connection line PVC 3G AWG20, 3x brass lead tips crimped
3	Accessory part: Inlet nozzle 09566-2-4013, not included in the standard scope of delivery
4	Depth of screw max. 5 mm

Translation of the original operating instructions

ebm-papst Mulfingen GmbH & Co. KG · Bachmühle 2 · D-74673 Mulfingen · Phone +49 (0) 7938 81-0 · Fax +49 (0) 7938 81-110 · info1@de.ebmpapst.com · www.ebmpapst.com

3.2 Nominal data

Motor	M3G045-AI

Phase	1~
Nominal voltage / VAC	230
Nominal voltage range / VAC	200 .. 240
Frequency / Hz	50/60

Type of data definition	ml
Speed / min^{-1}	3770
Power input / W	27
Current draw / A	0.27
Min. ambient temperature / °C	-25
Max. ambient temperature / °C	+60

ml = max. load · me = max. efficiency · fa = running at free air
cs = customer specs · cu = customer unit

Subject to alterations

3.3 Technical features

Mass	0.5 kg
Size	133 mm
Surface of rotor	Thick layer passivated
Material of electronics housing	Die-cast aluminium
Material of impeller	Plastic PA6, fibreglass-reinforced
Number of blades	7
Direction of rotation	Clockwise, seen on rotor
Type of protection	IP 54; Depending on installation and position
Insulation class	"B"
Humidity class	F3-1
Mounting position	Any
Condensate discharge holes	None, open rotor
Operation mode	S1
Motor bearing	Ball bearing
Technical features	- Output 10 VDC, max. 1.1 mA - Tach output - Soft start - Control input 0-10 VDC / PWM - Over-temperature protected electronics / motor
Touch current acc. IEC 60990 (measuring network Fig. 4, TN system)	<= 3.5 mA
Motor protection	Locked-rotor protection
Cable exit	Variable
Protection class	I (if protective earth is connected by customer)
Product conforming to standard	EN 60335-1

For cyclic speed loads, note that the rotating parts of the device are designed for maximum one million load cycles. If you have specific questions, contact ebm-papst for support.

3.4 Mounting data

For depth of screw, see chapter 3.1 Product drawing

⇒ Secure the mounting screws against accidentally coming loose (e.g. by using self-locking screws).

Strength class for mounting screws	8.8

You can obtain additional mounting data from the product drawing if necessary.

3.5 Transport and storage conditions

⇒ Use the device in accordance with its protection type.

Max. permissible ambient motor temp. (transp./ storage)	+80 °C
Min. permissible ambient motor temp. (transp./storage)	-40 °C

3.6 Electromagnetic compatibility

EMC interference immunity	Acc. to EN 61000-6-2 (industrial environment)
EMC harmonics	Acc. to EN 61000-3-2/3
EMC interference emission	Acc. to EN 61000-6-3 (household environment)

Translation of the original operating instructions

ebm-papst Mulfingen GmbH & Co. KG · Bachmühle 2 · D-74673 Mulfingen · Phone +49 (0) 7938 81-0 · Fax +49 (0) 7938 81-110 · info1@de.ebmpapst.com · www.ebmpapst.com

4. CONNECTION AND START-UP

4.1 Connecting the mechanical system



CAUTION
Cutting and crushing hazard when removing the fan from the packaging



→ Carefully hold the impeller to remove the device from its packaging. Make sure to avoid any shock.

→ Wear safety shoes and cut-resistant safety gloves.

⇒ Check the device for transport damage. Damaged devices must no longer be installed.

⇒ Install the undamaged device according to your application.

4.2 Connecting the electrical system



DANGER
Electric voltage on the device
Electric shock

→ Always install a protective earth first.

→ Check the protective earth.



DANGER
Incorrect insulation
Risk of fatal injury from electric shock

→ Use only cables that meet the specified installation requirements for voltage, current, insulation material, load etc.

→ Route cables such that they cannot be touched by any rotating parts.



DANGER
Electrical load (>50 µC) between mains wire and protective earth connection after switching of the supply when switching multiple devices in parallel.
Electric shock, risk of injury

→ Make sure that sufficient protection against accidental contact is provided.
Before working on the electrical connection, the connections to the mains supply and PE must be shorted.

CAUTION
Electrical voltage
The fan is a built-in component and features no electrically isolating switch.

→ Only connect the fan to circuits that can be switched off with an all-pole separating switch.

→ When working on the fan, you must switch off the installation/machine in which the fan is installed and secure it from being switched on again.

NOTE
Water penetration into leads or wires
Water enters at the cable end on the customers side and can damage the device.

→ Make sure that the cable end is connected in a dry environment.



Connect the device only to circuits that can be switched off using an all-pole disconnecting switch.

4.2.1 Prerequisites

⇒ Check whether the data on the type plate agree with the connection data.

⇒ Before connecting the device, ensure that the supply voltage matches the operating voltage of the device.

⇒ Only use cables designed for current according to the type plate. For determining the cross-section, follow the basic principles in accordance with EN 61800-5-1. The protective earth must have a cross-section equal to or greater than the outer conductor cross-section.
We recommend the use of 105°C cables. Ensure that the minimum cable cross-section is at least
AWG26/0.13 mm².

4.2.2 Idle current



Because of the EMC filter integrated for compliance with EMC limits (interference emission and interference immunity), idle currents in the mains cable can be measured even when the motor is at a standstill and the mains voltage is switched on.

- The values lie in a range of typical < 50 mA.
- The effective power in this operating state (readiness for operation) is simultaneously at typical < 2 W.

4.2.3 Residual current operated device



Only pulse-current sensitive and/or universal RCD protective devices (Type A or B) are permitted. Like frequency inverters, RCD protective devices cannot provide personal safety while operating the device. When switching on the power supply of the device, pulsed charge currents from the capacitors in the integrated EMC filter can lead to the RCD protective devices triggering without delay. We recommend residual current devices with a trigger threshold of 300 mA and delayed triggering (super-resistant, characteristic K).

4.2.4 Locked-rotor protection



Due to the locked-rotor protection, the start-up current (LRA) is equal to or less than the nominal current (FLA).

4.3 Connection of the cables

External leads are brought out of device.

⇒ First connect the "PE" (protective earth) connection.

⇒ Connect the lines according to your application. When doing so, observe chapter 4.4 Connection screen.

Translation of the original operating instructions

ebm-papst Mulfingen GmbH & Co. KG · Bachmühle 2 · D-74673 Mulfingen · Phone +49 (0) 7938 81-0 · Fax +49 (0) 7938 81-110 · info1@de.ebmpapst.com · www.ebmpapst.com

4.4 Connection screen

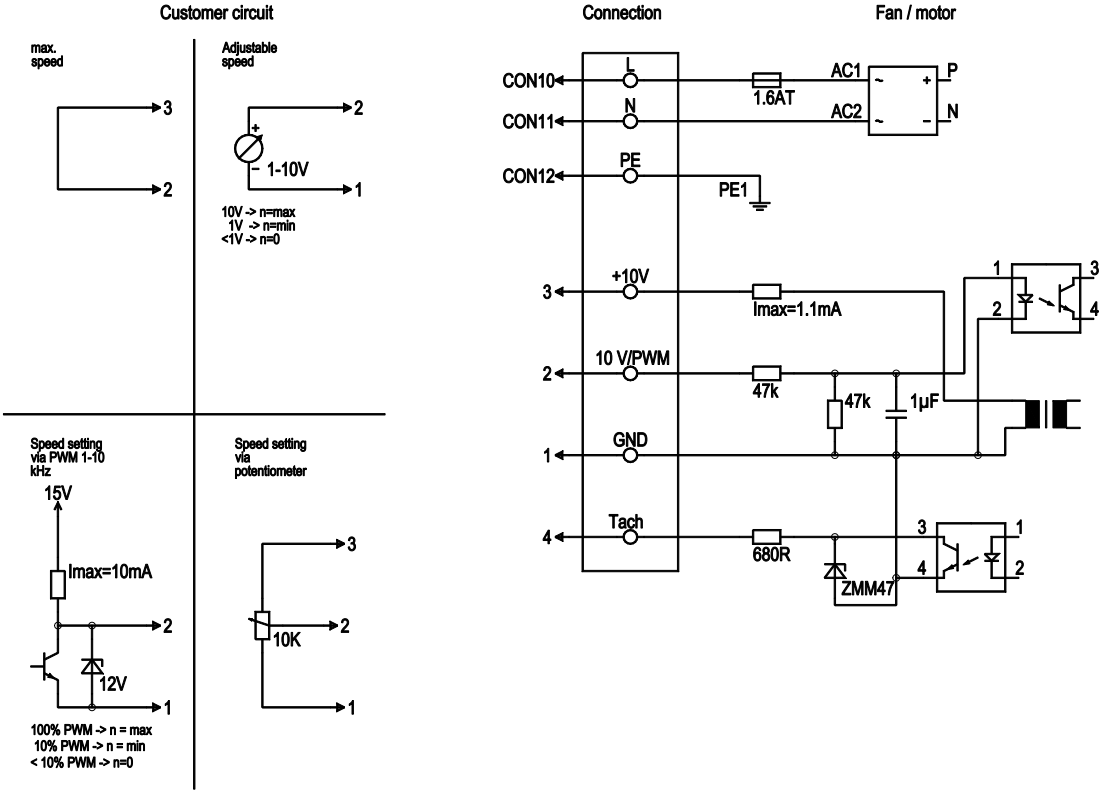

Line	No.	Signal	Colour	Function / assignment
	CON10	**L**	black	Power supply 230 VAC, 50-60 Hz, see type plate for voltage range
	CON11	**N**	blue	Neutral conductor
	CON12	**PE**	green/ yellow	Protective earth
	1	**GND**	blue	GND - Connection for control interface
	2	**0- 10V PWM**	yellow	Control input 0 - 10 V or PWM, electrically isolated
	3	**10V/ max 1.1mA**	red	Voltage output 10V/ 1.1mA, electrically isolated, not short-circuit-proof.
	4	**Tach**	white	Tach output: open collector, 1 pulse per revolution, electrically isolated

Translation of the original operating instructions

ebm-papst Mulfingen GmbH & Co. KG · Bachmühle 2 · D-74673 Mulfingen · Phone +49 (0) 7938 81-0 · Fax +49 (0) 7938 81-110 · info1@de.ebmpapst.com · www.ebmpapst.com

4.5 Checking the connections

⇒ Make sure that the power is off (all phases).

⇒ Secure it from being switched on again.

⇒ Check the correct fit of the connection lines.

⇒ Route the connecting cables in the terminal box so that the terminal box cover closes without resistance.

⇒ Use all plug screws (the entire number). In doing so, insert the screws manually to avoid damage to the thread.

4.6 Switch on device



WARNING
Hot motor housing
Fire hazard

→ Ensure that no combustible or flammable materials are located close to the fan.

⇒ Inspect the device for visible external damage and the proper function of the protective features before switching it on.

⇒ Check the air flow paths of the fan for foreign objects and remove any that are found.

⇒ Apply the nominal voltage to the voltage supply.

⇒ Start the device by changing the input signal.

4.7 Switching off the device

Switching off the device during operation:

⇒ Switch on the device via the control input.

⇒ Do not switch the motor (e.g. in cyclic operation) on and off via power supply.

Switching off the device for maintenance work:

⇒ Switch on the device via the control input.

⇒ Do not switch the motor (e.g. in cyclic operation) on and off via power supply.

⇒ Disconnect the device from the supply voltage.

⇒ When disconnecting, be sure to disconnect the earth wire connection last.

5. INTEGRATED PROTECTIVE FUNCTIONS

The integrated protective functions cause the motor to switch off automatically in case of faults described in the table.

Malfunctions	**Description / Function of safety feature**
Rotor position detection error	An automatic restart occurs.
Locked rotor	⇒ After the blockage is removed, the motor restarts automatically.
Line under-voltage (mains input voltage outside of permitted nominal voltage)	⇒ If the mains supply voltage returns to permitted values, the motor restarts automatically.

Translation of the original operating instructions

ebm-papst Mulfingen GmbH & Co. KG · Bachmühle 2 · D-74673 Mulfingen · Phone +49 (0) 7938 81-0 · Fax +49 (0) 7938 81-110 · info1@de.ebmpapst.com · www.ebmpapst.com

6. MAINTENANCE, MALFUNCTIONS, POSSIBLE CAUSES AND REMEDIES

Do not perform any repairs on your device. Return the device to ebm-papst for repair or replacement.

WARNING
Terminals and connections have voltage even with a unit that is shut off
Electric shock

→ Wait five minutes after disconnecting the voltage at all poles before opening the device.

CAUTION
If control voltage is applied or a speed setpoint is stored, the motor automatically restarts, e.g. after a power failure.
Danger of injury

→ Keep out of the danger zone of the device.

→ When working on the device, switch off the mains supply voltage and secure the latter from being switched on again.

→ Wait until the device stops.

→ After working on the device, remove any used tools or other objects from the device.

If the device remains out of use for some time, e.g. when in storage, we recommend switching the device on for at least two hours to allow any condensate to evaporate and to move the bearings.

Malfunction/error	Possible cause	Possible remedy
Impeller running roughly	Imbalance in rotating parts	Clean the device; if imbalance is still evident after cleaning, replace the device. If you have attached any weight clips during cleaning, make sure to remove them afterwards.
Motor does not turn	Mechanical blockage	Switch off, de-energise, and remove mechanical blockage.
	Mains supply voltage faulty	Check mains supply voltage, restore power supply, apply control signal.
	Faulty connection	De-energise, correct connection, see connection diagram.
Overtemperature of electronics/motor	Insufficient cooling	Improve cooling. Let the device cool down. To reset the error message, switch off the mains supply voltage for a min. of 25 s and switch it on again.
	Ambient temperature too high	Reduce the ambient temperature. Reset by reducing control input to 0.
	Unacceptable operating point	Correct the operating point. Let the device cool down.

If you have any other problems, contact ebm-papst.

6.1 Cleaning

NOTE
Damage to the device during cleaning.
Malfunction possible

→ Do not clean the device using a water jet or high-pressure washer.

→ Do not use any cleaners containing acids, bases or solvents.

→ Do not use any pointed or sharp-edged objects to clean.

6.2 Safety test

NOTE
High-voltage test
The integrated EMC filter contains Y capacitors. Therefore, the trigger current is exceeded when AC testing voltage is applied.

→ Test the device with DC voltage when you carry out the high-voltage test required by law. The voltage to be used corresponds to the peak value of the AC voltage required by the standard.

What has to be tested?	How to test?	Frequency	Which measure?
Check the protective casing against accidental contact for damage and to ensure that it is intact	Visual inspection	At least every 6 months	Repair or replacement of the device
Check the device for damage to blades and housing	Visual inspection	At least every 6 months	Replacement of the device
Mounting the connection lines	Visual inspection	At least every 6 months	Fasten

Translation of the original operating instructions

ebm-papst Mulfingen GmbH & Co. KG · Bachmühle 2 · D-74673 Mulfingen · Phone +49 (0) 7938 81-0 · Fax +49 (0) 7938 81-110 · info1@de.ebmpapst.com · www.ebmpapst.com

Mounting of protective earth connection	Visual inspection	At least every 6 months	Fasten
Check the insulation of the wires for damage	Visual inspection	At least every 6 months	Replace wires
Impeller for wear/deposits/ corrosion and damage	Visual inspection	At least every 6 months	Clean or replace impeller
Check the ball bearings to ensure they are quiet, can move easily and are free of play	Manual check by turning the rotor in shut-off state	At least every 6 months	Replace device in case of noise, difficulty of movement or clearance of the bearings

Translation of the original operating instructions

ebm-papst Mulfingen GmbH & Co. KG · Bachmühle 2 · D-74673 Mulfingen · Phone +49 (0) 7938 81-0 · Fax +49 (0) 7938 81-110 · info1@de.ebmpapst.com · www.ebmpapst.com