IG5899

Inductive sensor

IGB2008BBROG/UP/6M/PH

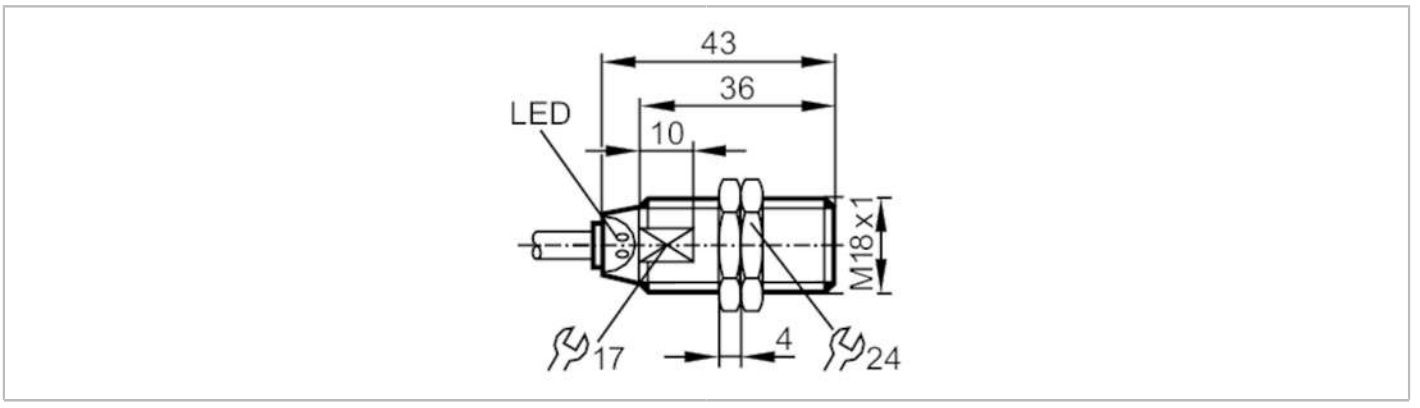

Product characteristics		
Electrical design		PNP/NPN
Output function		normally closed
Sensing range	[mm]	8
Housing		threaded type
Dimensions	[mm]	M18 x 1 / L = 43
Electrical data		
Operating voltage	[V]	10...36 DC
Protection class		II
Reverse polarity protection		no
Outputs		
Electrical design		PNP/NPN
Output function		normally closed
Max. voltage drop switching output DC	[V]	5
Minimum load current	[mA]	5
Max. leakage current	[mA]	1
Permanent current rating of switching output DC	[mA]	100
Switching frequency DC	[Hz]	100
Short-circuit protection		no
Overload protection		no
Detection zone		
Sensing range	[mm]	8
Accuracy / deviations		
Correction factor		steel: 1 / stainless steel: 0.7 / brass: 0.4 / aluminium: 0.4 / copper: 0.3
Operating conditions		
Ambient temperature	[°C]	-25...70
Protection		IP 67
Tests / approvals		
EMC		EN 60947-5-2
MTTF	[years]	2673

IG5899

Inductive sensor

IGB2008BBROG/UP/6M/PH

Mechanical data		
Weight	[g]	303
Housing		threaded type
Mounting		flush mountable
Dimensions	[mm]	M18 x 1 / L = 43
Thread designation		M18 x 1
Materials		brass white bronze coated; PC

Displays / operating elements		
Display	switching status	1 x LED, red

Accessories	
Items supplied	lock nuts: 2

Remarks	
Pack quantity	1 pcs.

Electrical connection

Cable: 6 m, PUR / PVC; 2 x 0.34 mm²

Connection

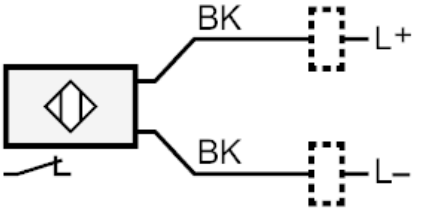

	Core colours :
BK =	black