8EAC0152.001-1

1 General information

Analog multi-encoder plug-in module 8EAC0152.001-1 can be used in the slot on an ACOPOS P3 8EI servo drive. The module contains an analog multi-encoder interface for evaluating analog encoders.

The plug-in module evaluates encoders that are built into B&R servo motors or used to evaluate external axes.

The encoder input signals are monitored. This makes it possible to detect open circuits, short circuits and failures of the encoder power supply (reference signal).

When switched on, the plug-in module is automatically identified by the operating system on the ACOPOS P3 8EI servo drive.

Information:

The encoder interfaces of 8EAC plug-in modules are each permanently assigned to an axis (motor connection X5xx) of the 8EI servo amplifier in which the respective 8EAC plug-in module is being operated.

8EAC encoder interface plug-in module	Assignment		
	8EIxxxxxS... 1-axis modules	8EIxxxxxD... 2-axis modules	8EIxxxxxT... 3-axis modules
X41x	X51 / X51A	X51 / X51A	X51 / X51A
X42x	---	X52	X52
X43x	---	---	X53

Supported encoder types

- SinCos
- EnDat 2.1, serial with evaluation of sinusoidal output signals
- HIPERFACE
- SSI SinCos, serial with evaluation of sinusoidal output signals

Information:

The encoder type for the multi-encoder interface is not predefined from the factory.
Before commissioning, configure the encoder type for each multi-encoder interface and – depending on the encoder type – the encoder supply voltage in Automation Studio!

Caution!

An incorrect configuration can result in irreparable damage to the connected encoder!

The following encoder types are supported:

	SinCos	EnDat 2.1	SSI SinCos	HIPERFACE
Encoder power supply	5.2 V ±0.1 V 11.45 V ±0.1 V 3)	5.2 V ±0.1 V	5.2 V ±0.1 V 11.45 V ±0.1 V 3)	11.45 V ±0.1 V
Compensation 1)	Max. 2x 0.7 V			---
Terminating resistors	120 Ω			
Signal frequency	DC up to 400 kHz			DC up to 200 kHz
Transfer rate	---	781.25 kbit/s	100 to 400 kbit/s	9600 bit/s
Support 2)	ACOPOS operating system 5.00.0 and higher			ACOPOS operating system 5.05.0 and higher

Table 1: Encoder types - Overview

1) Compensation takes place by configuring the cable resistance in Automation Studio.
2) Operating system version from which a certain encoder type is supported.
3) 11.45 V encoder power supply is supported by ACOPOS operating system 5.10.0 and later.

2 Order data

Order number	Short description	Figure
	Plug-in modules	
8EAC0152.001-1	ACOPOS P3 plug-in module, analog multi-encoder interface	
	Optional accessories	
	Adapter cables	
8ECG00X4.3151D-0	ACOPOS P3 adapter cable, length 0.4 m, for analog multi-encoder interfaces and incremental encoder interfaces, 5x 2x 0.14 mm², 10-pin male IX connector to 15-pin female DSUB	

Table 2: 8EAC0152.001-1 - Order data

3 Technical data

Order number	8EAC0152.001-1
General information	
Module type	ACOPOS P3 plug-in module
B&R ID code	0xEFDF
Slot	Slot 1
Max. power consumption	12 W
Certifications	
CE	Yes
UKCA	Yes
UL	cULus E225616 Power conversion equipment
KC	Yes
Encoder connection	
Module-side connection	10-pin male connector
Status indicators	None
Max. encoder cable length	75 m
Encoder inputs	
Sine/Cosine inputs	
Signal transmission	Differential signals, symmetrical [1)]
Signal frequency	Depends on the configured encoder type
Terminating resistor	120 Ω
Resolution	12-bit
Encoder power supply	
Output voltage	Configurable Typ. 11.45 V ±0.1 V / 5.2 V ±0.1 V
Load capacity	Max. 300 mA for 5.2 V Max. 200 mA for 11.45 V [2)]
Protective measures	
Overload-proof	Yes
Short-circuit proof	Yes
Sense lines	None [3)]
Reference input	
Signal transmission	Differential signal, symmetrical
Differential voltage for low	≤-0.2 V
Differential voltage for high	≥+0.2 V
Terminating resistor	120 Ω
Position	
Resolution @ 1 V_{SS}	2^{14} increments * number of encoder lines
Synchronous serial interface	
Signal transmission	RS485
Data transfer rate	Depends on the configured encoder type
Support	
Motion system	
mapp Motion	5.1.0 and higher
ACP10/ARNC0	5.00.0 and higher

Table 3: 8EAC0152.001-1 - Technical data

Order number	8EAC0152.001-1
Ambient conditions	
Temperature	
Operation	
Nominal	5 to 40°C
Maximum	55°C
Storage	-25 to 55°C
Transport	-25 to 70°C
Relative humidity	
Operation	5 to 85%
Storage	5 to 95%
Transport	Max. 95% at 40°C
Mechanical properties	
Dimensions	
Width	82 mm
Length	24 mm
Depth	103 mm
Weight	64 g

Table 3: 8EAC0152.001-1 - Technical data

1) HIPERFACE encoder type: Asymmetrical
2) Up to revision C0, the load capacity is reduced from 200 mA to 100 mA at an output voltage of 11.45 V and ambient temperatures starting at 40°C.
3) Possible to compensate for encoder voltage drop by configuring cable resistance (max. 2x 0.7 V at 5 V output voltage)

4 Wiring

4.1 Pinout

Information:

Plug-in module 8EAC is not capable of hot plugging. An 8EAC plug-in module is only permitted to be connected to or disconnected from an ACOPOS P3 8EI servo drive when power to the servo drive is switched off.

Figure	X41M	Pin	Name	Function depending on configured encoder type			
				SinCos	EnDat 2.1	SSI SinCos	HIPERFACE
	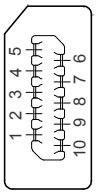	1	B\	Channel B inverted			REF cosine
		2	B	Channel B			Cosine
		3	GND	Encoder power supply 0 V			
		4	A\	Channel A inverted			REF sine
		5	A	Channel A			Sine
		6	R	Reference pulse	Data +		
		7	R\	Reference pulse inverted	Data -		
		8	U+	Encoder power supply 5 V			Encoder power supply 12 V
		9	T-	Temperature sensor -	Clock -		Temperature sensor -
		10	T+	Temperature sensor +	Clock +		Temperature sensor +

Table 4: Analog multi-encoder interface 8EAC0152.001-1 - Pinout

Danger!

The connections for the encoders are isolated circuits. These connections are therefore only permitted to be connected to devices or components that have sufficient isolation per IEC 60364-4-41 or EN 61800-5-1.

5 Input/Output circuit diagram

SinCos

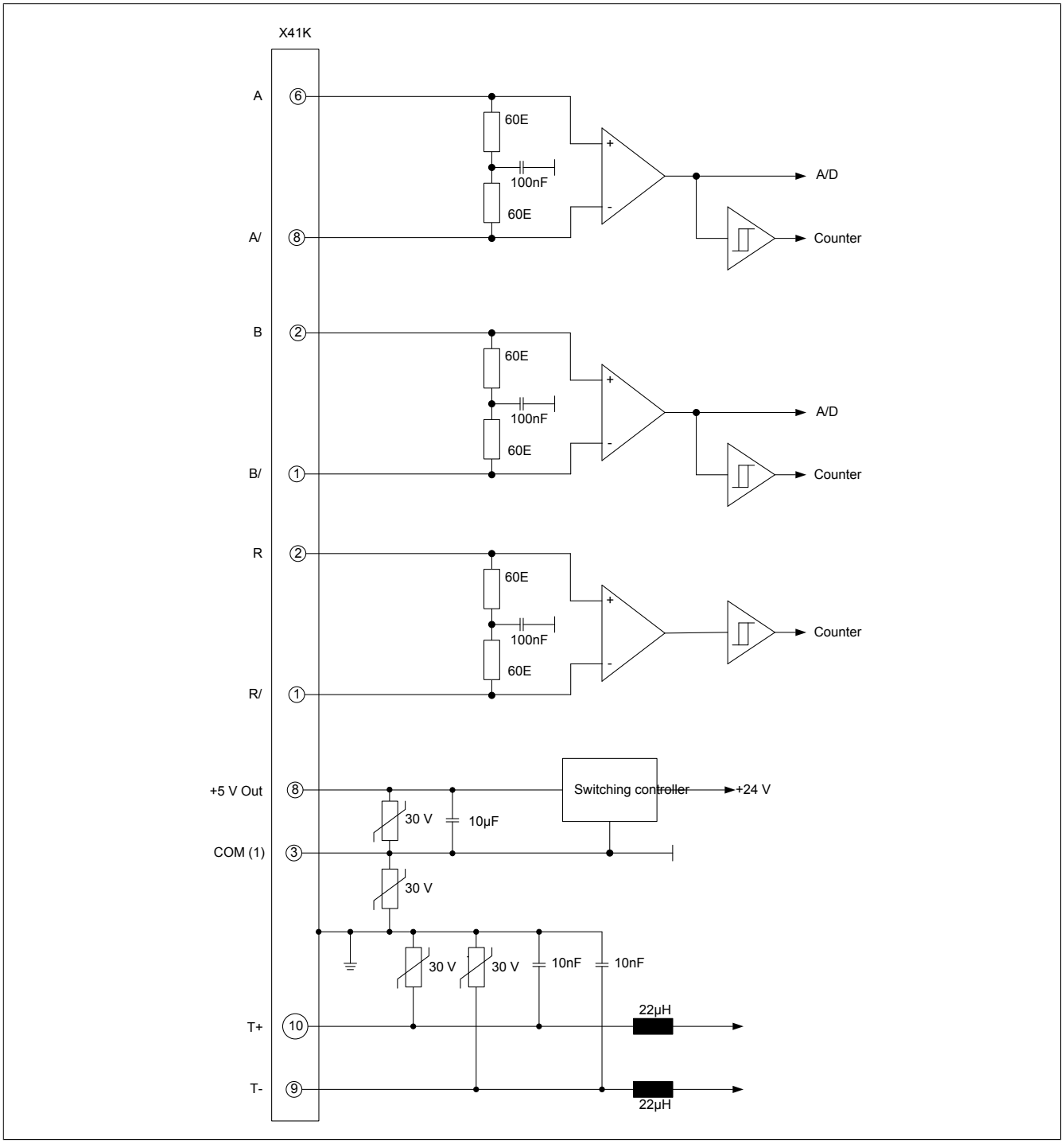

EnDat 2.1 and SSI SinCos

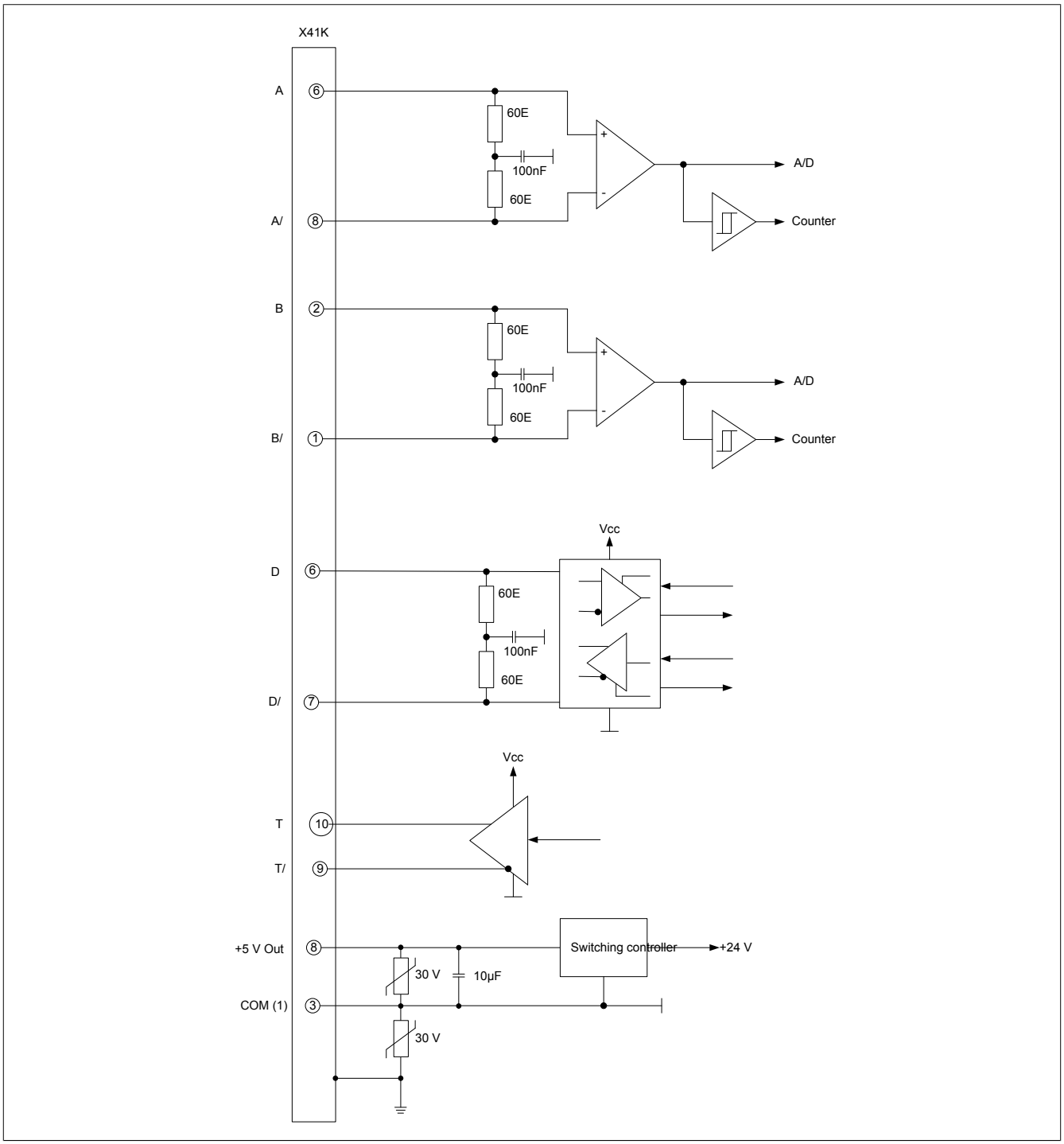

HIPERFACE

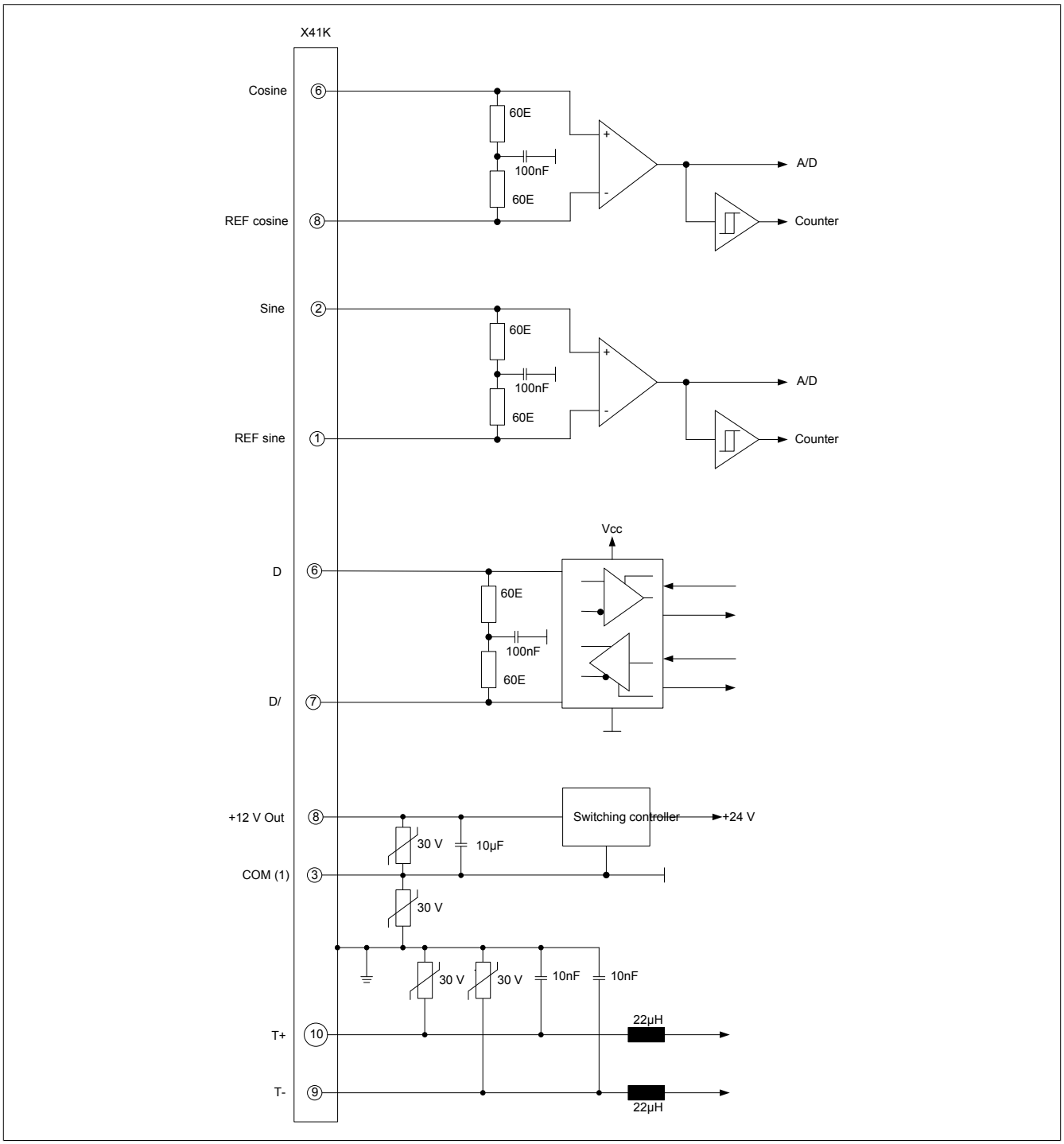
X41K
Cosine
6
60E
100nF
60E
A/D
Counter
REF cosine
8
Sine
2
60E
100nF
60E
A/D
Counter
REF sine
1
Vcc
D
6
60E
100nF
60E
D/
7
+12 V Out
8
Switching controller
+24 V
30 V
10µF
COM (1)
3
30 V
30 V
30 V
10nF
10nF
22µH
T+
10
T-
9
22µH