

Encoder WDG 24C

www.wachendorff-automation.com/wdg24c

Wachendorff Automation

... systems and encoders

- Complete systems
- Industrial rugged encoders to suit your application
- Standard range and customer versions
- Maximum permissible loads
- 48-hour express production
- Made in Germany
- Worldwide distributor network

IndustrieROBUST

Encoder WDG 24C



- very compact construction for use in harsh conditions
- permissible bearing loads similar to our “big encoders”
- up to IP67 all around
- Hall effect based signal generation

www.wachendorff-automation.com/wdg24c

Resolution	
Max. pulses per revolution PPR	64 ppr

Mechanical Data	
Housing	
Flange	synchro flange
Flange material	aluminum
Housing cap	aluminum
Housing	Ø 24 mm
Shaft(s)	
Shaft material	stainless steel
Starting torque	approx. 0.2 Ncm at ambient temperature
Shaft	Ø 6 mm
Shaft length	L: 12 mm
Max. Permissible shaft loading radial	80 N
Max. Permissible shaft loading axial	50 N
Bearings	
Bearings type	2 precision ball bearings
Nominale service life	0.55 x 10'9 revs. at 100 % rated shaft load 8.5 x 10'10 revs. at 40 % rated shaft load 6.8 x 10'11 revs. at 20 % rated shaft load
Max. operating speed	12000 rpm

Machinery Directive: basic data safety integrity level	
$MTTF_d$	200 a
Mission time (TM)	25 a
Nominale service life (L10h)	6.8 x 10'11 revs. at 20 % rated shaft load and 12000 rpm
Diagnostic coverage (DC)	0 %

Electrical Data	
Power supply VDC	5 - 30 VDC
Current consumption	typ. 40 mA
Signal shape	square-wave
Output circuit	HTL inverted
Channels	AB, ABN, and inverted signals
Output	push-pull
Load	max. 30 mA / channel
Signal level mA	at 20 mA
Signal level H>	H > Vcc - 10 % Vcc
Signal level L<	L < 2.5 VDC
Output frequency	max. 200 kHz
Circuit protection	no
Light reserve warning	no

General Data	
Weight	approx. 50 g
Connections	cable or connector outlet
Protection rating (EN 60529)	IP65 all around with SK6, housing IP40 with K7, L7
Operating temperature	-20 °C up to +80 °C
Storage temperature	-20 °C up to +80 °C

More Information
General technical data and safety instructions http://www.wachendorff-automation.com/gtd
Options http://www.wachendorff-automation.com/acc

Cable connection K7, L7 (IP40) with 2 m cable

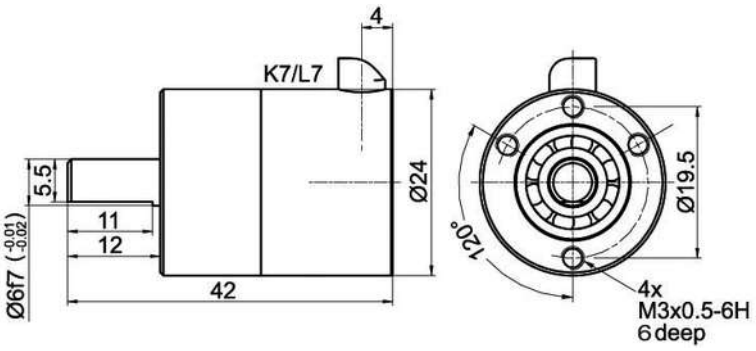

Description		ABN inv. poss.
K7	radial, shield not connected (IP40)	•

Assignments	
	K7
Circuit	M30
GND	WH
(+) Vcc	BN
A	GN
B	YE
N	GY
Light reserve warning	-
A inv.	RD
B inv.	PK, (BK at ACA)
N inv.	BU, (VT at ACA)
Shield	flex

Example Order No.	Type						Your encoder
WDG 24C	WDG 24C						WDG 24C
	Pulses per revolution PPR:						
64	64						64
	Channels:						
ABN	ABN						ABN
	Output circuit						
M30	**Resolution PPR**	**Power supply VDC**	**Output circuit**		**Light reserve warning**	**Order key**	M30
	1-128, 256, 512, 1024	5 - 30	HTL inverted		-	M30	
	Electrical connections						
K7	**Description**				**ABN inv. poss.**	**Order key**	K7
	Cable: length (2 m standard, WDG 58T: 1 m)						
	radial, shield not connected (IP40)				•	K7	
	Options						
	Description				**Order key**		
	Without option				Empty		

Example Order No.=	WDG 24C	64	ABN	M30	K7		WDG 24C	64	ABN	M30	K7		Your encoder



For further information please contact our local distributor.
Here you find a list of our distributors worldwide.
http://www.wachendorff-automation.com/distributors_worldwide.html

WACHENDORFF

Wachendorff Automation GmbH & Co. KG
Industriestrasse 7 • D-65366 Geisenheim

Phone: +49 67 22 / 99 65 25
Fax: +49 67 22 / 99 65 70
E-Mail: wdg@wachendorff.de
www.wachendorff-automation.de