Electr. Buzzer EM Contin/pulse 24VDC BK



Part No.: 111.000.55

MECHANICAL DATA	
Height	72 mm
Diameter	50 mm
Materials	PC PC/ABS
Housing colour	Black
Protection category	IP65
Connection	Screw terminals
cross-sectional area maximum	1,50mm² / 16AWG
Type of fixing	Built-in mounting
Working temperature minimum	-20°C
Working temperature maximum	+50°C
Weight with packaging	50 g
Product weight	40 g

ELECTRICAL DATA	
Operating voltage	24V
Operating voltage type	DC
Operating voltage tolerance	+/- 10%
Rated operational voltage	24 VDC
Rated operational current	25 mA
Rated inrush current	350 mA
Protection class	Protection class 2
Pollution degree	3 In the connection area: 2

ACUSTICAL DATA	
Volume (max) at 1m distance	80,0 dB (A)
Acoustic signal image	Continuous tone Pulse tone
Audio frequency	2800 Hz
Acoustic service life	5,000 h minimum

APPROVAL DATA	
Conforms with CE	Yes
WEEE	Yes
Conforms with ATEX-directive	No
Conforms with CCC	No
Conforms with UL	No
Conforms with FCC	No
Conforms with IC	No

! For additional installation and mounting information, refer to the appropriate user guide at www.werma.com. This printed copy is for information only and is subject to alteration.

Electr. Buzzer EM Contin/pulse 24VDC BK

EAC certificate available	Yes
Conforms with UKCA (Importer)	Yes (WERMA (UK) Ltd.)
Conforms with AS-I	No
ICAO Certification	No
Conforms with DNV	No
Conforms with RoHS CN	No
Conforms with VdS	No

DRAWING

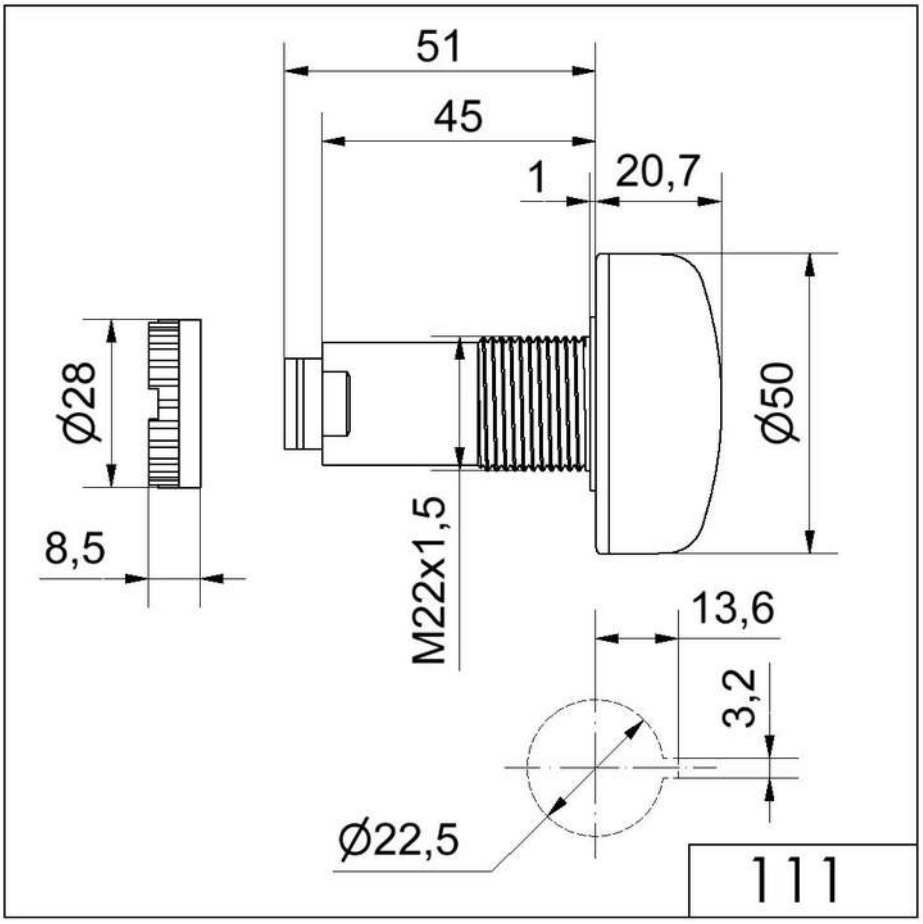

! For additional installation and mounting information, refer to the appropriate user guide at www.werma.com. This printed copy is for information only and is subject to alteration.