

- High load 40 A • AC coils - of up to 220 V AC, DC coils - of up to 110 V DC, insulation class F: 155 °C
- For PCB • Small dimensions, light weight
- High shock and vibration resistance
- High quality, long life
- Applications: for automobile, machine, electronic equipment, air conditioner, household appliance
- Recognitions, certifications, directives: RoHS,

Contact data

Number and type of contacts		1 CO, 1 NO	
Contact material		**$AgSnO_2$**, AgCdO ❶	
Rated / max. switching voltage	AC	240 V / 300 V	
	DC	110 V / 110 V	
Min. switching voltage		10 V	
Rated load	AC1	1 CO: 40 A / 30 A (NO/NC) / 240 V AC	1 NO: 40 A / 240 V AC
	DC1	1 CO: 40 A / 30 A (NO/NC) / 30 V DC	1 NO: 40 A / 30 V DC
Rated current		40 A	
Max. breaking capacity	AC1	1 CO: 9 600 VA / 7 200 VA (NO/NC)	1 NO: 9 600 VA
	AC3	1 CO: 2,0 HP / 1,5 HP (NO/NC) UL 508 (single-phase motor)	1 NO: 2,0 HP UL 508 (single-phase motor)
	DC1	1 CO: 1 200 W / 900 W (NO/NC)	1 NO: 1 200 W
Contact resistance		≤ 30 mΩ	

Coil data

Rated voltage	50/60 Hz AC	12 ... 220 V
	DC	5 ... 110 V
Must release voltage		DC: ≥ 0,1 U_n
Operating range of supply voltage		see Tables 1, 2
Must operate voltage		≤ 0,75 U_n
Rated power consumption	AC	2,0 VA
	DC	0,9 W

Insulation according to PN-EN 60664-1

Insulation rated voltage		500 V AC
Overvoltage category		II
Flammability class		V-0 UL94
Insulation resistance		> 1 000 MΩ 500 V DC, 60 s
Dielectric strength		
• between coil and contacts		4 000 V AC type of insulation: reinforced
• contact clearance		1 500 V AC type of clearance: micro-disconnection

General data

Operating / release time (typical values)		15 ms / 10 ms	
Electrical life			
• resistive AC1	1 200 cycles/hour	10^5 1 CO: 40 A / 30 A (NO/NC), 240 V AC	1 NO: 40 A, 240 V AC
• resistive DC1	1 200 cycles/hour	10^5 1 CO: 40 A / 30 A (NO/NC), 30 V DC	1 NO: 40 A, 30 V DC
Mechanical life (cykle)		10^7	
Dimensions (L x W x H)		32,5 x 27,6 x 20,5 mm	
Weight		30 g	
Ambient temperature	• operating	-55...+100 °C	
Cover protection category		IP 40 or **IP 64** PN-EN 60529	
Shock resistance		20 g	
Vibration resistance		1,5 mm DA (constant amplitude) 10...55 Hz	
Solder bath temperature		max. 235 °C	
Soldering time		max. 3,5 s	

The data in bold type relate to the standard versions of the relays. ❶ AgCdO contact material in electrical contacts is only for use in electrical and electronic equipment (EEE) in compliance with directive RoHS2 2011/65/EU in restricted categories of EEE covered by this directive. Relpol S.A. is not responsible for usage relays with AgCdO contact material in categories of EEE where it is prohibited by the directive RoHS2 2011/65/EU.

Dimensions

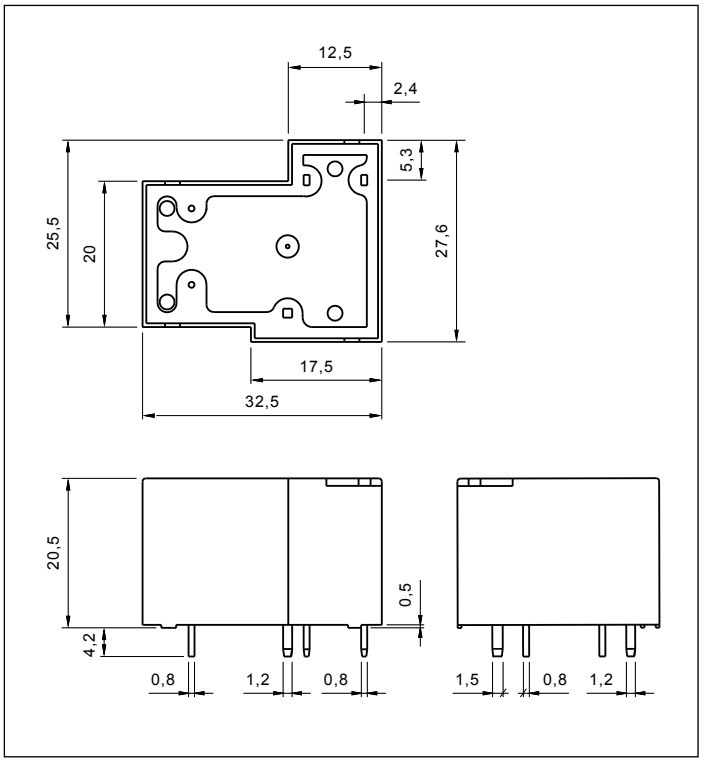

Connection diagrams (pin side view)

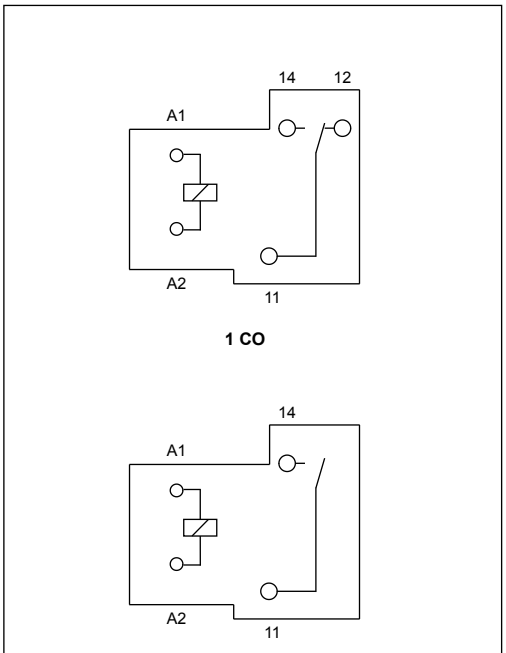

Pinout (solder side view)

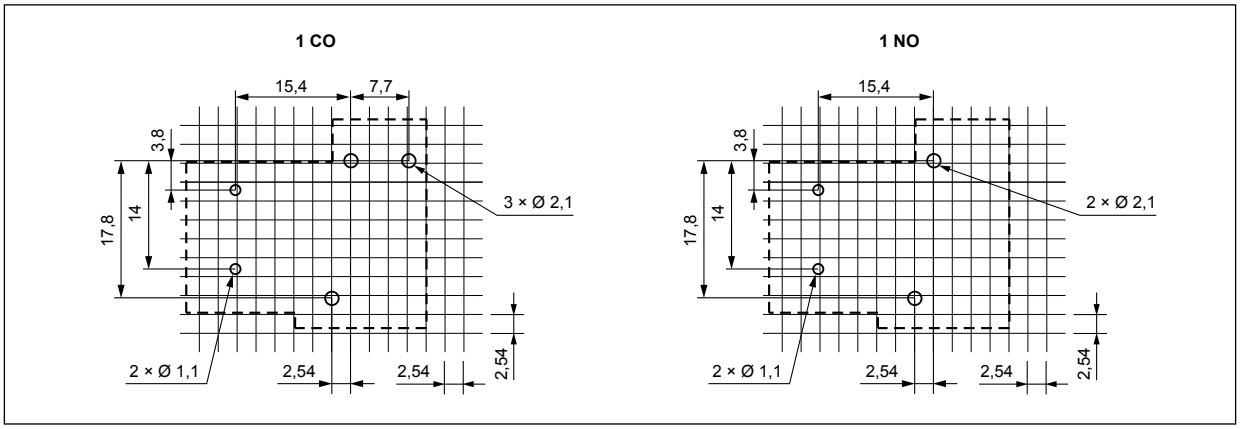

Mounting

Relays **R40N** are designed for direct PCB mounting.

PRECAUTIONS:
1. Ensure that the parameters of the product described in its specification provide a safety margin for the appropriate operation of the device or system and never use the product in circumstances which exceed the parameters of the product. **2.** Never touch any live parts of the device. **3.** Ensure that the product has been connected correctly. An incorrect connection may cause malfunction, excessive heating or risk of fire. **4.** In case of any risk of any serious material loss or death or injuries of humans or animals, the devices or systems shall be designed so to equip them with double safety system to guarantee their reliable operation.

Coil data - DC voltage version Table 1

Coil code	Rated voltage V DC	Coil resistance at 20 °C Ω	Acceptable resistance	Coil operating range V DC	
				min. (at 20 °C)	max. (at 20 °C)
1005	**5**	**28**	**± 10%**	**3,8**	**6,5**
1012	**12**	**160**	**± 10%**	**9,0**	**15,6**
1024	**24**	**640**	**± 10%**	**18,0**	**31,2**
1048	48	2 560	± 10%	36,0	62,4
1110	110	13 445	± 10%	82,5	143,0

The data in bold type relate to the standard versions of the relays.

Coil data - AC 50/60 Hz voltage version Table 2

Coil code	Rated voltage V AC	Coil resistance at 20 °C Ω	Acceptable resistance	Coil operating range V AC 50 Hz	
				min. (at 20 °C)	max. (at 20 °C)
5012	12	27	± 10%	9,0	15,6
5024	**24**	**120**	**± 10%**	**18,0**	**31,2**
5110	110	2 360	± 10%	82,5	143,0
5120	120	3 040	± 10%	90,0	156,0
5220	**220**	**13 490**	**± 10%**	**165,0**	**286,0**

The data in bold type relate to the standard versions of the relays.

Ordering codes

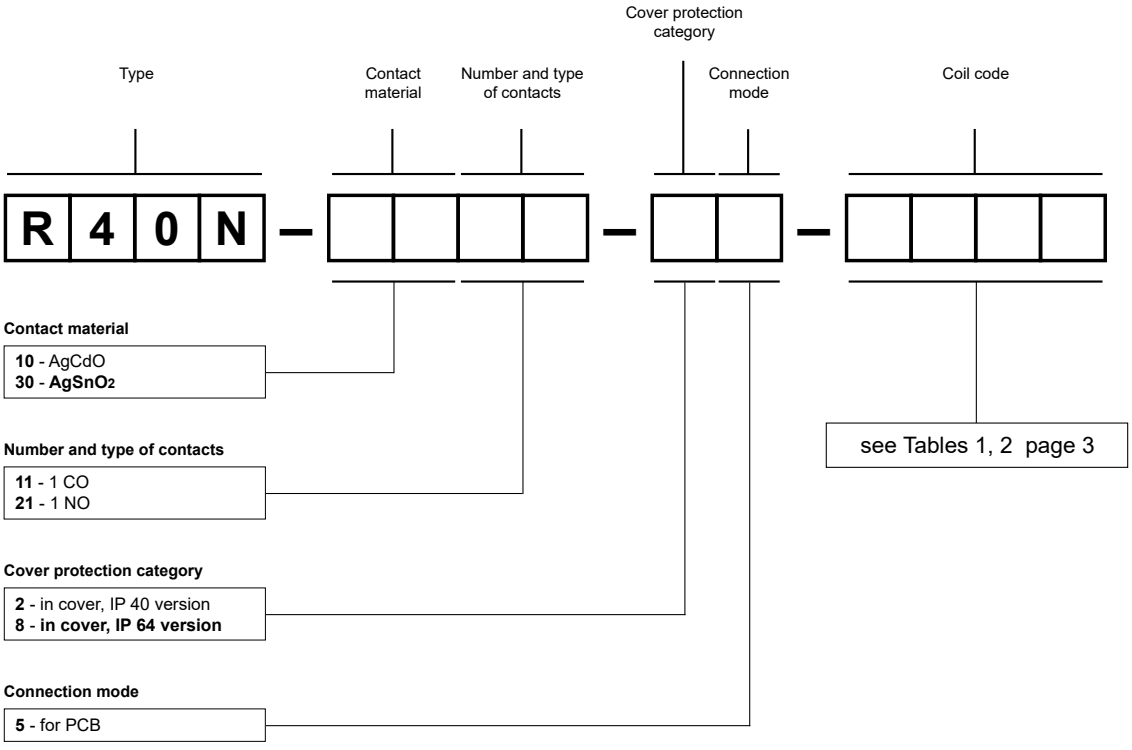

Examples of ordering codes:

R40N-3011-85-1012 relay **R40N**, for PCB, one changeover contact, contact material $AgSnO_2$, coil voltage 12 V DC, in cover IP 64

R40N-1021-25-5024 relay **R40N**, for PCB, one normally open contact, contact material AgCdO, coil voltage 24 V AC 50/60 Hz, in cover IP 40