JUMO GmbH & Co. KG
Delivery address: Mackenrodtstraße 14
36039 Fulda, Germany
Postal address: 36035 Fulda, Germany
Phone: +49 661 6003-0
Fax: +49 661 6003-607
Email: mail@jumo.net
Internet: www.jumo.net

JUMO Instrument Co. Ltd.
JUMO House
Temple Bank, Riverway
Harlow, Essex, CM20 2DY, UK
Phone: +44 1279 63 55 33
Fax: +44 1279 62 50 29
Email: sales@jumo.co.uk
Internet: www.jumo.co.uk

JUMO Process Control, Inc.
6733 Myers Road
East Syracuse, NY 13057, USA
Phone: +1 315 437 5866
Fax: +1 315 437 5860
Email: info.us@jumo.net
Internet: www.jumousa.com

Pressure and differential pressure switch for air, smoke and flue gases

Adjustment range from 0.4 to 150 mbar



Type 4 ADS-82

Brief description

Pressure and differential pressure switches Type 4 ADS are used to measure vacuum, pressure or differential pressure in HVAC and filter technology, for example. Pressure and differential pressure switches consist essentially of base, diaphragm, intermediate disc, case and protective cover. When used as pressure or vacuum switch, the base and diaphragm with disc form the pressure chamber.
When used as a differential pressure switch, the base and a second diaphragm with intermediate disc form the two pressure chambers. A pressure change in the pressure chamber causes an axial displacement of a pin linked to the diaphragm. When the selected switching point is reached, a spring-loaded contact is activated.

Technical data

Case
Polycarbonate

Parts in contact with medium
Polycarbonate

Diaphragm
NBR

Pressure connection
2× tubing nipple 4.6 mm dia.

Cable entry
Pg11

Electrical connection
screw terminals for up to 2.5 mm^2 conductor cross-section

Type of contact
single-pole as changeover switch

fine silver (Ag)

Protection
IP54

Adjustment ranges, differential

Adjustment range mbar	Differential Δp in mbar
0.4 to 3	≤ 0.3
1 to 10	≤ 0.5
2.5 to 50	≤ 1.5
30 to 150	≤ 5

Max. operating pressure
0 to 500 mbar

Switching point accuracy
The setpoint indicated on the scale conforms to the actual value with a tolerance of ±15 %.

Rating
AC 50 to 60 Hz, 250 V, 6 A, φ = 1
AC 50 to 60 Hz, 250 V, 3 A, φ = 0.6

Permissible ambient temperature and temperature of medium
-15 to +60 °C

Switching function with rising pressure
1 n.c. opening, 2 n.o. closing

Switching function with falling pressure
1 n.c. closing , 2 n.o. opening

Operating position

The standard operating position is with the diaphragm standing vertically; with horizontal face-up mounting, the pressure monitor switches when the pressure is about 0.5 mbar higher.

With horizontal face-down mounting, the pressure monitor switches when the pressure is about 0.5 mbar lower.

In an intermediate position, the pressure monitor will switch at a pressure that deviates by a maximum of ±0.5 mbar from the selected setpoint.

Accessories

HVAC installation kit, consisting of:

- 2 tube connections
- 6 self-tapping screws
- 2 extension tubes
- 1 jig
- 1 fixing bracket

Electrical connection

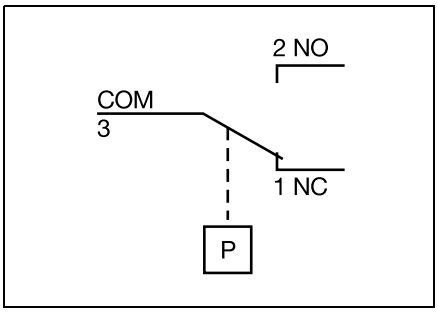

JUMO GmbH & Co. KG
Delivery address: Mackenrodtstraße 14
36039 Fulda, Germany
Postal address: 36035 Fulda, Germany
Phone: +49 661 6003-0
Fax: +49 661 6003-607
Email: mail@jumo.net
Internet: www.jumo.net

JUMO Instrument Co. Ltd.
JUMO House
Temple Bank, Riverway
Harlow, Essex, CM20 2DY, UK
Phone: +44 1279 63 55 33
Fax: +44 1279 62 50 29
Email: sales@jumo.co.uk
Internet: www.jumo.co.uk

JUMO Process Control, Inc.
6733 Myers Road
East Syracuse, NY 13057, USA
Phone: +1 315 437 5866
Fax: +1 315 437 5860
Email: info.us@jumo.net
Internet: www.jumousa.com

Dimensions

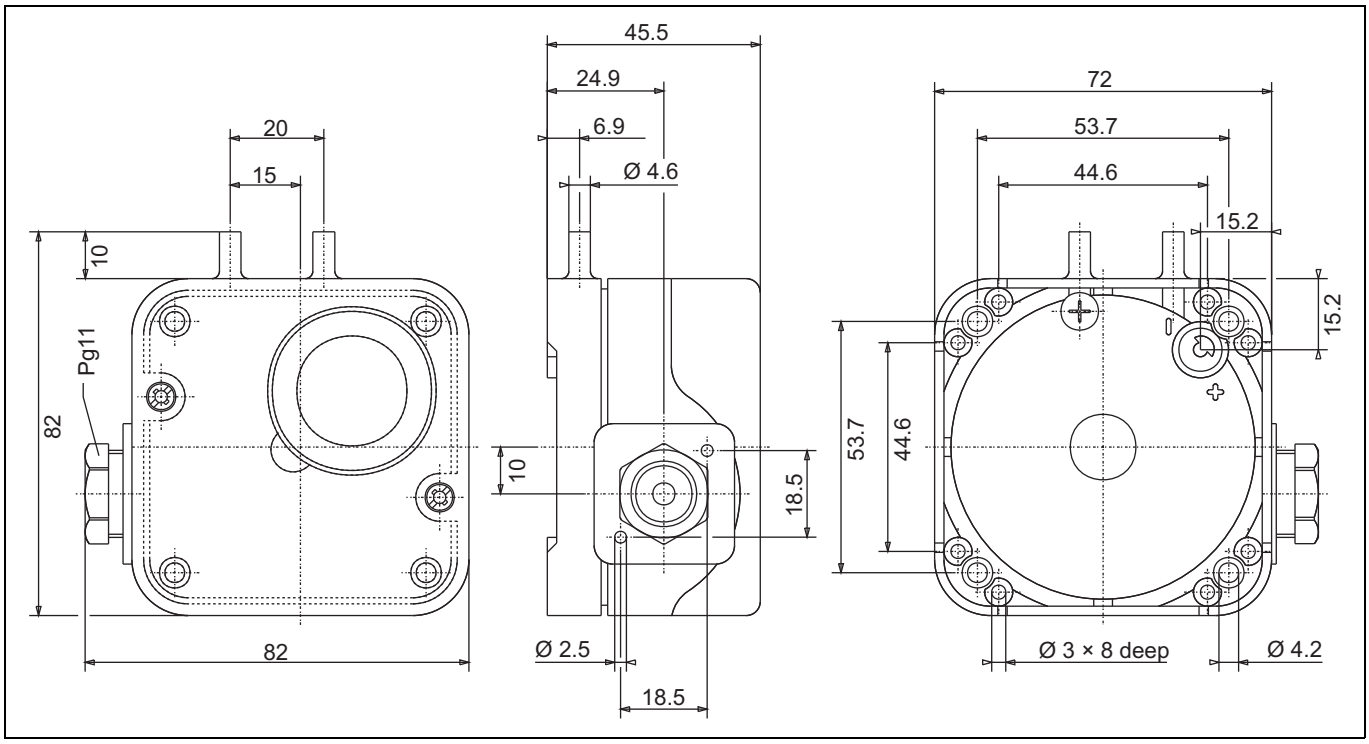

Order details

	(1)	Basic version
4 ADS-82		Pressure and differential pressure switch for air, smoke and flue gases in surface-mounted case 82 mm × 82 mm

	(1)
Order code	
Order example	4 ADS-82

Accessories

Designation	Part no.
HVAC installation kit: Pressure and differential pressure switch for air and smoke	00381238