Powering Business Worldwide

11/18 IL01208009Z
(AWA1230-1992, AWA1230-2539)

Instruction Leaflet
Montageanweisung
Notice d'installation
Instrucciones de montaje
Istruzioni per il montaggio
安装说明
Инструкция по монтажу

NZMN(H)(L)3(-4)-AE(VE)(ME)…(-T)
NZMB(C)(N)(S)(H)3(-4)-A(S)
(P)N3-…
+NZM3(-4)-XT

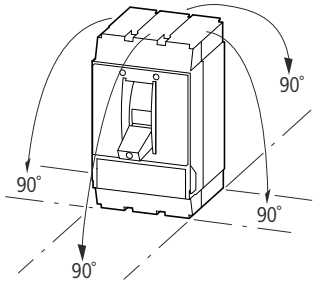

NZMN(H)(L)3-AE(AEF)…-NA
NZMN(H)(L)3-VE(VEF)…-NA
NZMN(H)(L)3-SE…-CNA
N(S)3-…-NA
NZMB(N)(H)3-A(-AF)…(-BT)-NA
NZMB(N)(H)3-S…(-BT)-CNA

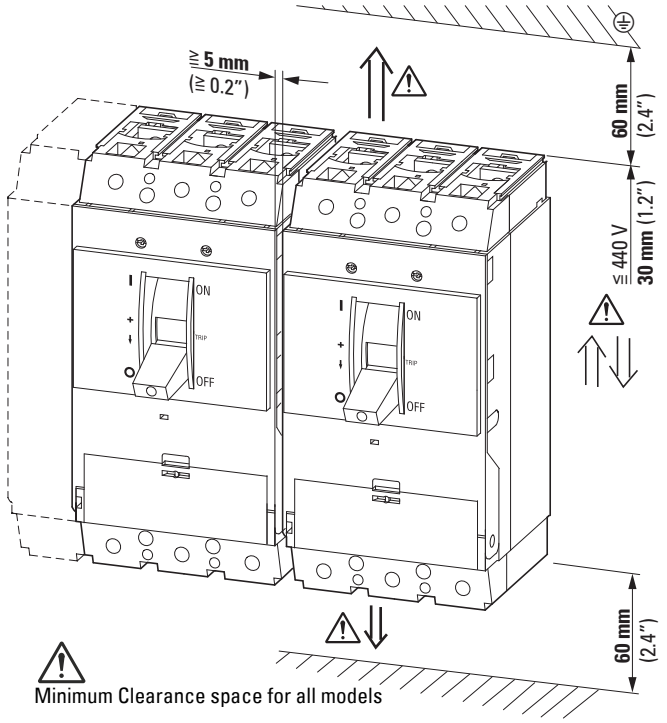

Minimum Clearance space for all models

Blowout direction
in case of a
short-circuit

Ausblasrichtung
im Kurzschlussfall

Dégagement gazeux
en cas de court-circuit

Dirección de salida
de los gases en caso
e cortocircuito

Direzione di estinzione in
caso di corto circuito

短路时的排空方向

Направление продувки в
случае короткого
замыкания

(en) Electric current! Danger to life!
Only skilled or instructed persons may carry out the following operations.

(de) Lebensgefahr durch elektrischen Strom!
Nur Elektrofachkräfte und elektrotechnisch unterwiesene Personen dürfen die im Folgenden beschriebenen Arbeiten ausführen.

(fr) Tension électrique dangereuse !
Seules les personnes qualifiées et averties doivent exécuter les travaux ci-après.

(es) ¡Corriente eléctrica! ¡Peligro de muerte!
El trabajo a continuación descrito debe ser realizado por personas cualificadas y advertidas.

(it) Tensione elettrica: Pericolo di morte!
Solo persone abilitate e qualificate possono eseguire le operazioni di seguito riportate.

(zh) 触电危险！
只允许专业人员和受过专业训练的人员进行下列工作。

(ru) Электрический ток! Опасно для жизни!
Только специалисты или проинструктированные лица могут выполнять следующие операции.

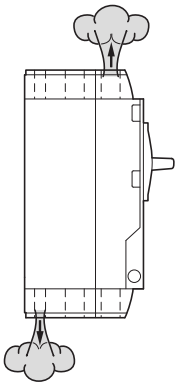

-NA
-CNA
(UL/CSA models)

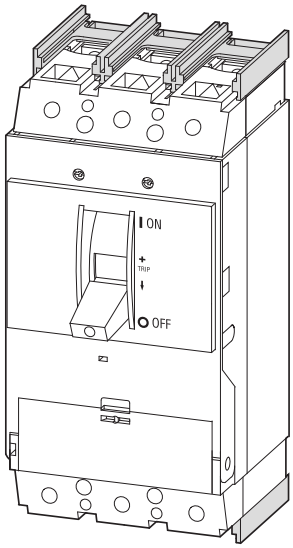

(en) Caution!
The removal or exchange of parts during mounting may become necessary.
Refer to installation instructions for proper assembly and to maintain electrical clearances.

(de) Vorsicht!
Für die Durchführung der beschriebenen Arbeiten kann das Entfernen oder der Austausch von Teilen notwendig sein.
Bitte alle Installations-Anweisungen beachten, um die erforderlichen Luft- und Kriechstrecken nach dem Zusammenbau zu gewährleisten.

(fr) Attention !
L'enlèvement où l'échange de certaines pièces pendant le montage est parfois nécessaire.
Consultez l'instruction d'assemblage pour assurer une installation conforme aux normes.

(es) Atención!
Con el fin de llevar a cabo los trabajos descritos, puede ser necesario eliminar o cambiar alguna pieza.
Le rogamos tenga en cuenta todas las instrucciones de instalación para así garantizar las líneas de fuga y efluvio necesarias tras el montaje.

(it) Attenzione!
Per l'esecuzione degli interventi descritti potrebbe essere necessaria la rimozione o sostituzione di alcuni pezzi.
Attenersi alle istruzioni d'installazione per garantire dopo l'assemblaggio le vie di dispersione necessarie.

(zh) 小心！ 执行所描述的操作时可能需要拆除或更换零部件。
请遵守所有相关的安装说明，
以确保在组装后能获得需要的空间距离或爬电距离。

(ru) Внимание!
При проведении описанных процедур может возникнуть необходимость демонтировать или заменить детали.
Для обеспечения надлежащих зазоров и вывода тока утечки, соблюдайте все инструкции по монтажу.

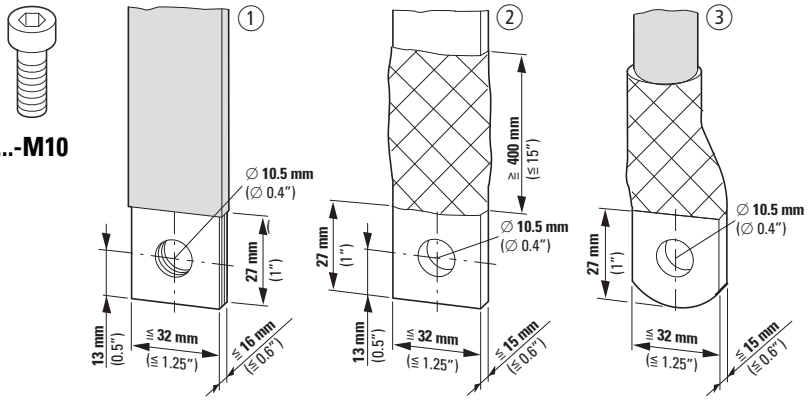

①	②	③
≧ 6 x 16 x 0.8 mm	≧ 20 x 5 mm	1 x 16 – 240 mm²
≦ 10 x 32 x 1 mm + 5 x 32 x 1 mm	≦ 30 x 15 mm	1 x 4 – 350 kcmil
–	–	2 x 16 – 240 mm²
		2 x 4 – 350 kcmil

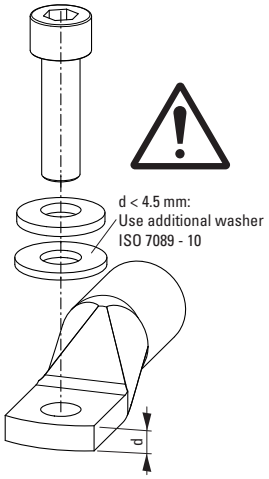

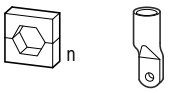

n

n = Number of crimps
n = Anzahl der Pressungen
n = Nombre de sertissages
n = Número de compresiones
n = Numero delle crimpature
n = 压制数量
n = Число прессований

2	NZM3-XKS185
4	NZM3-XKS240

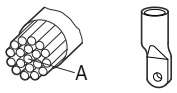

A

185 mm²	NZM3-XKS185
240 mm²	NZM3-XKS240



3pol	M10 x 35
4pol	

1

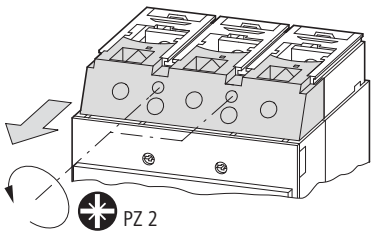

2

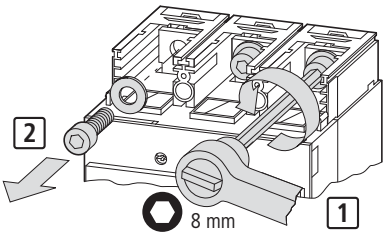

UL/CSA models:

Follow diagrams below when making connections using XKS screw terminations for compression crimp lugs:
– Always use terminal cover NZM3-XKSA when making connections with bare bus or non-insulated crimp lugs, or when two wires per phase are connected.
To mount terminal cover NZM3-XKSA, refer to instruction sheet IL01208010Z (former AWA1230-2048).

3

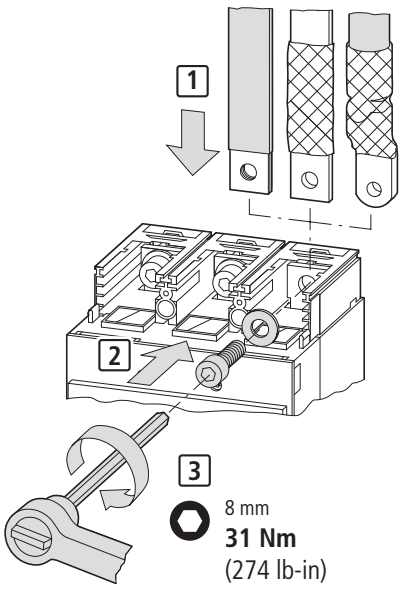

11/18 IL01208009Z

NZM3(-4)-…630

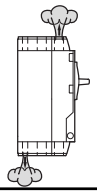

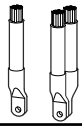

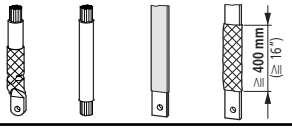



	XKSAE oder* XKP oder* XKSA			
≦ 415 V	① + 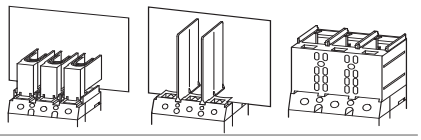		①	①
	XKSAE oder* XKP oder* XKSA			XKSAE oder* XKP oder* XKSA
≦ 525 V	① + 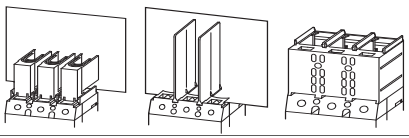		①	① + 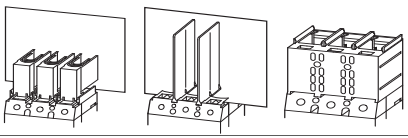
	XKSA	XKP oder* XKSA		XKP oder* XKSA
≦ 690 V	① + 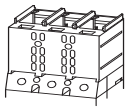		① + 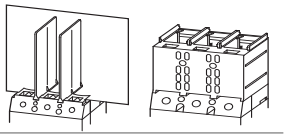	① + 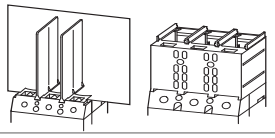
	XKSA	XKSA		XKSA
> 690 V	① + 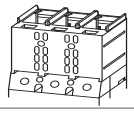		① + 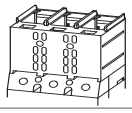	① + 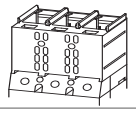

① Basic device – Grundgerät – Appareil de base – Aparato base – Apparecchio base – 基础设备 – Основное устройство
\+ Combination options – Kombinationsmöglichkeiten – Combinaisons possibles – Combinaciones posibles – Combinazioni possibili 组合方法 – Комбинационные возможности
* or – oder – ou – ó – oppure – 或者 – или

11/18 IL01208009Z

4

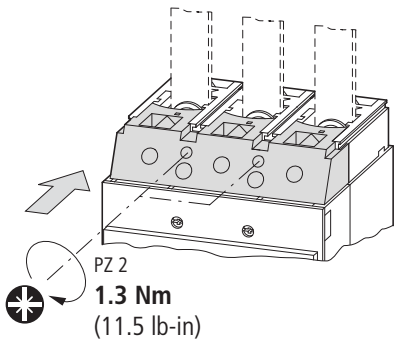

1.3 Nm
(11.5 lb-in)

5

NZMB(C)(N)(H)3(-4)-A(S)
NZM…3-A(AF)…-NA
NZM…3-S…-CNA

I_r (A)
Thermal

I_i (A)
Magnetic

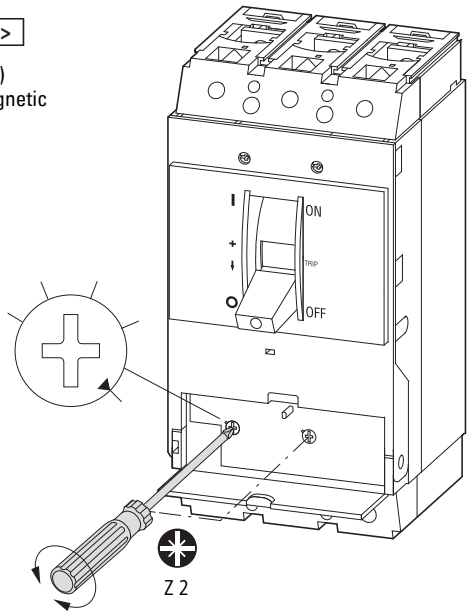

Note: On certain models with UL/CSA labeling the thermal trip setting is fixed and only the magnetic trip (instantaneous) setting is adjustable.

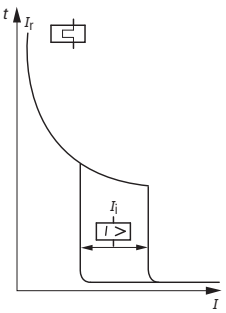

Setting I_i with DC = setting I_i AC/1.45
Einstellwert I_i bei DC = Einstellwert I_i AC/1,45
Valeur de réglage I_i avec DC = valeur de réglage I_i AC/1,45
Valor de respuesta I_i con DC = valore de respuesta I_i AC/1,45
Valore di regolazione I_i con DC = valore di regolazione I_i AC/1,45
DC 的设置值 I_i = AC/1.45 的设置值 I_i
Значение Ii при постоянном токе = Ii при переменном токе /1.45

NZMN(H)(L)3(-4)-AE(VE)(ME)…
+NZM3(-4)-XT

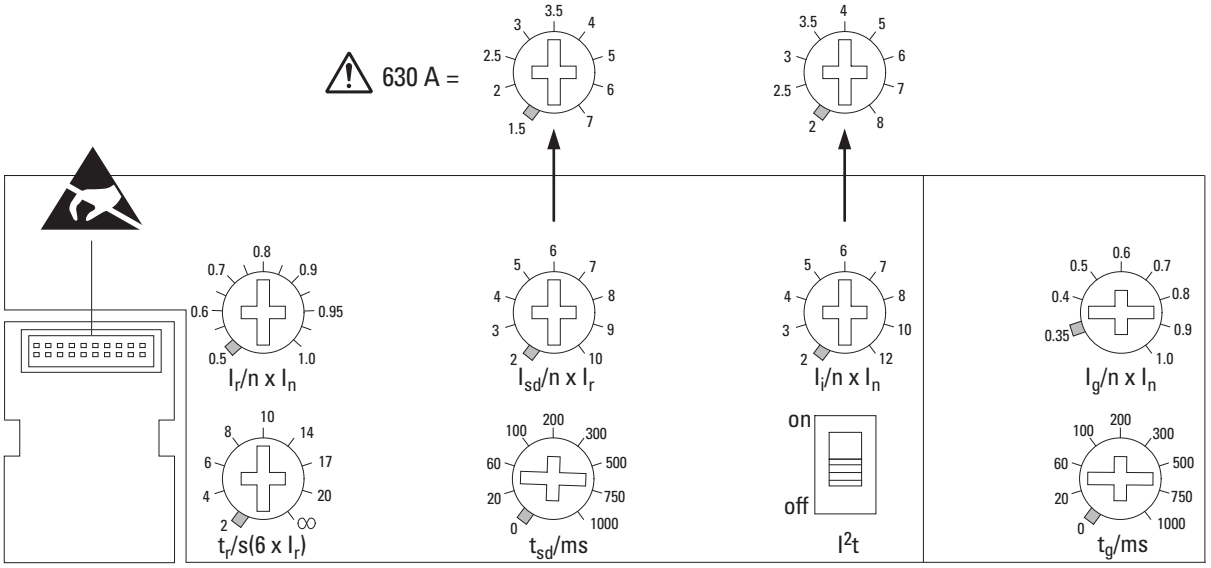

-NA, -CNA Electronic Trip Circuit Breaker Adjustable Settings (UL/CSA models)

250…400 A

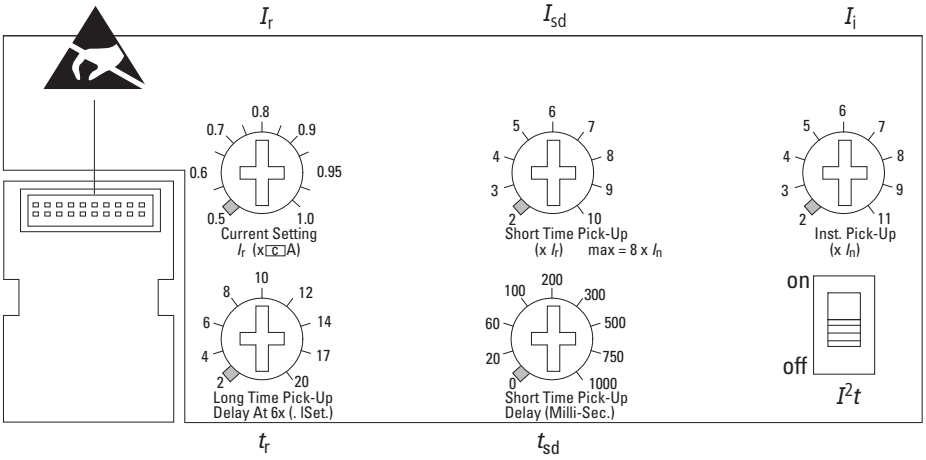

450…600 A

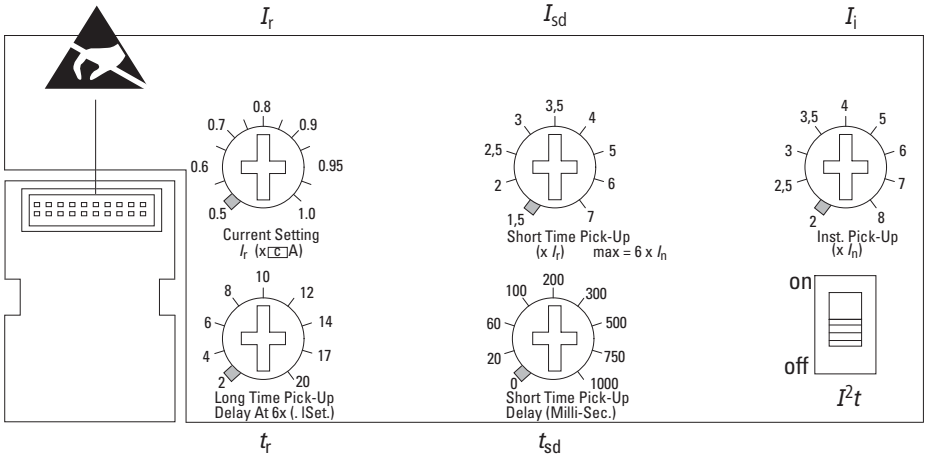

	Current setting I_r (x c A)	Long Time Pick-Up Delay at 6 x I_r (sec)	Short Time Pick-Up (x I_r)	Short Time Pick-Up Delay (milli-sec.)	Inst. Pick-Up (x I_n)	I^2_t
NZM3-VE...-NA	X	X	X	X	X	X
NZM3-VEF...-NA	Fixed current Rating	X	X	X	X	X
NZM3-AE...-NA	X	–	–	–	X	–
NZM3-AEF...-NA	Fixed current Rating	–	–	–	X	–
NZM3-SE...-CNA	–	–	–	–	X	–

11/18 IL01208009Z

1 **Settings – Einstellung – Réglages – Parámetros – Regolazione – 设置 – Настройка**

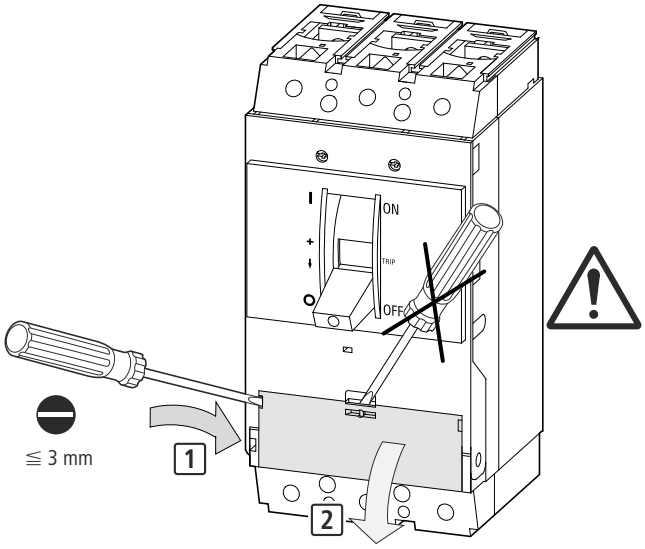

2 I_r (A), t_r (s), I_{sd} (A), t_{sd} (ms)

I_i (A)

I^2t ON/OFF

I_g (A), t_g (ms)

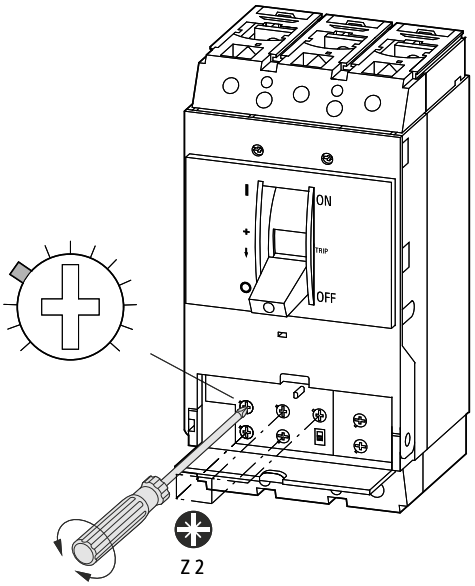

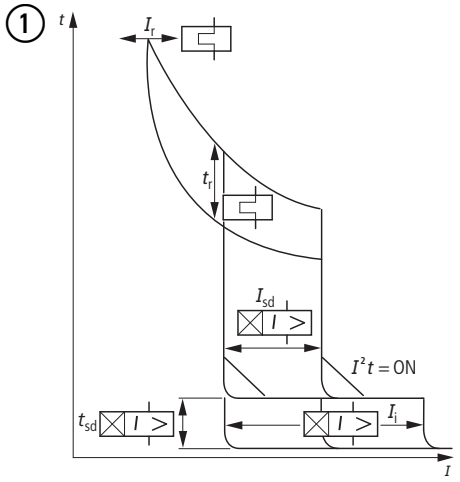

(I_n = Max. current rating)

I_r = Adjustable current setting (0.5 – 1.0 x I_n) for Long Time Pick-up.

t_r = Adjustable Long Time Pick-up Delay (2 – 20 sec.) factory set at 10 seconds.

I_{sd} = Adjustable Short Time Pick-up (2 – 10 x I_r) factory set at 6 x I_r.

(NZM...3-VE600-NA: 1.5 – 7 x I_r, factory set at 6 x I_r).

t_{sd} = Short-Time Pick-up Delay (0 – 1000 ms) factory set at 0 ms.

I_i = Instantaneous Pick-up (2 – 12 x I_n) factory set at 12 x I_n.

NZM3-VE250/400-NA: (2 – 11 x I_n) factory set at 11 x I_n.

NZM3-VE600-NA: (2 – 8 x I_n) factory set at 8 x I_n.

I^2t function switch = factory set to OFF.

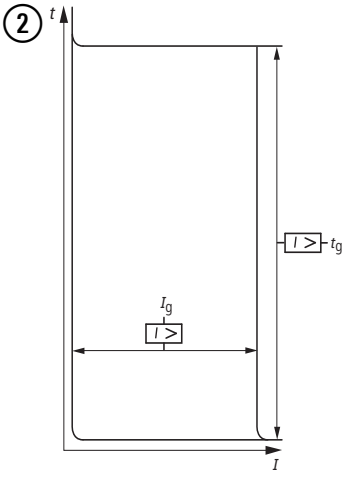

11/18 IL01208009Z

M22-K10 M22-K01 M22-CK10 M22-CK01 Auxiliary Switches

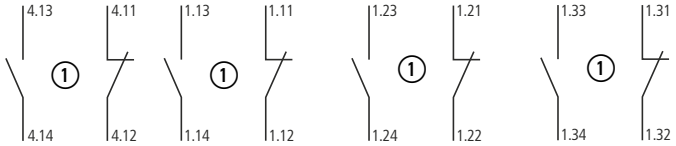

① or – oder – ou – ó – oppure – 或者 – или

IEC

$I_{th} = I_e$

	U_e (V)	I_e (A)
AC-15	115	4
	230	4
	400	2
	500	1
DC-13	24	3
	42	1.7
	60	1.2
	110	0.6
	220	0.3

-NA
-CNA
(UL/CSA)

$I_{th} = I_e$

U_e (V)	I_e (A)
600 AC	5
250 DC	1

Pilot Duty Ratings:
B 600, Q 300
Above 300 V AC
Same polarity

Notes on mounting and wiring Auxiliary Switches for UL/CSA labeled models:
- M22-K(10)(01) have screw terminals. M22-CK(10)(01) have clamp terminals
- Switch modules are snapped into place at the locations shown in the diagrams that follow.
- Switches will function as either „standard“ or „trip/alarm“ contacts depending on their mounting location.
- Location „HIN“ refers to standard operation. Location „HIA“ refers to „trip/alarm“ operation.
- Follow the numbering and wiring scheme provided above depending on the contact location and function. (N.O. or N.C.)

Permissible contact configuration: 1 x HIA and/or 3 x HIN.

Note:
After mounting of the M22… switch is complete, check off the appropriate box on the auxiliary switch label provided on the side of the breaker or switch.

M22-CK11
M22-CK20
M22-CK02

HIA

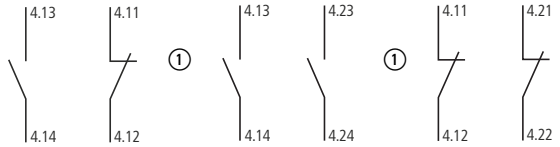

① or – oder – ou – ó – oppure – 或者 – или

HIN

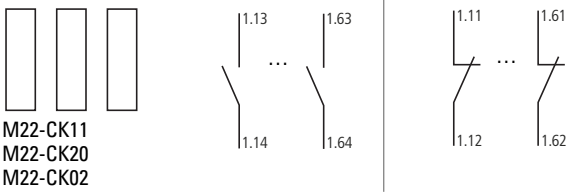

M22-CK11
M22-CK20
M22-CK02

IEC

$I_{th} = I_e$

	U_e (V)	I_e (A)
AC-15	115	4
	230	4
DC-13	24	3
	42	1
	60	0.8
	110	0.5
	220	0.2

Mounting – Montage – Montage – Montaje – Montaggio – 安装 – Монтаж

1

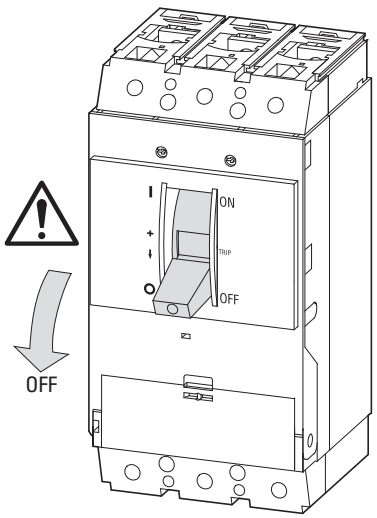

2

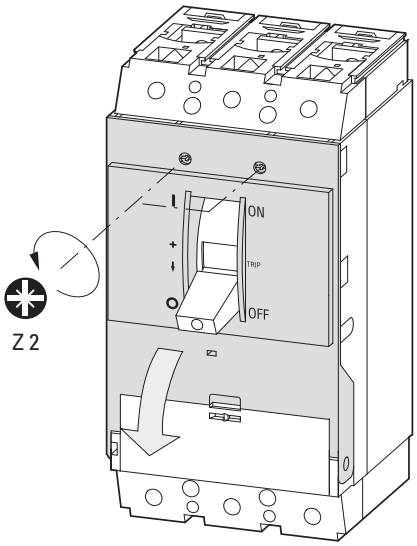

3

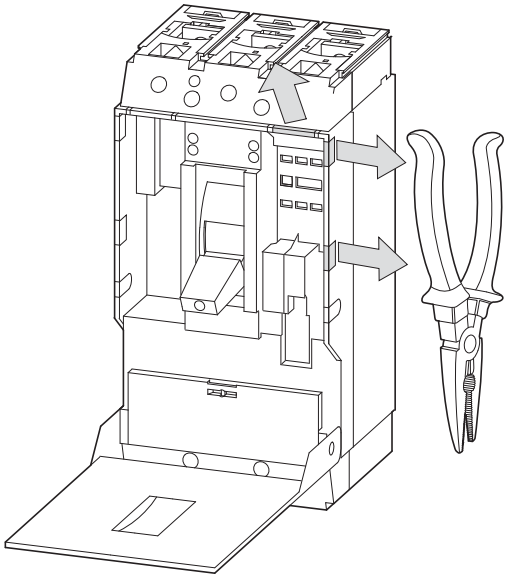

4

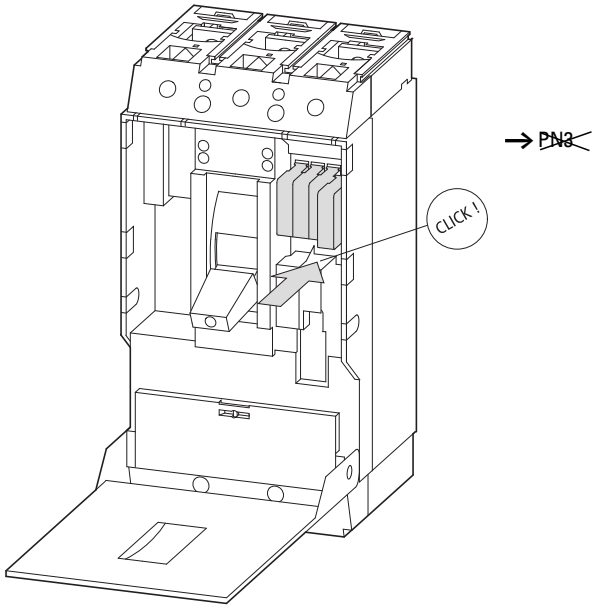

11/18 IL012080092

5a M22-K10, M22-K01

(Screw Terminals)

…K10: N. O. Contact

…K01: N. C. Contact

	2 x 0.75 – 2.5 mm^2 2 x AWG 18 – AWG 14
	UL/CSA = Cu only

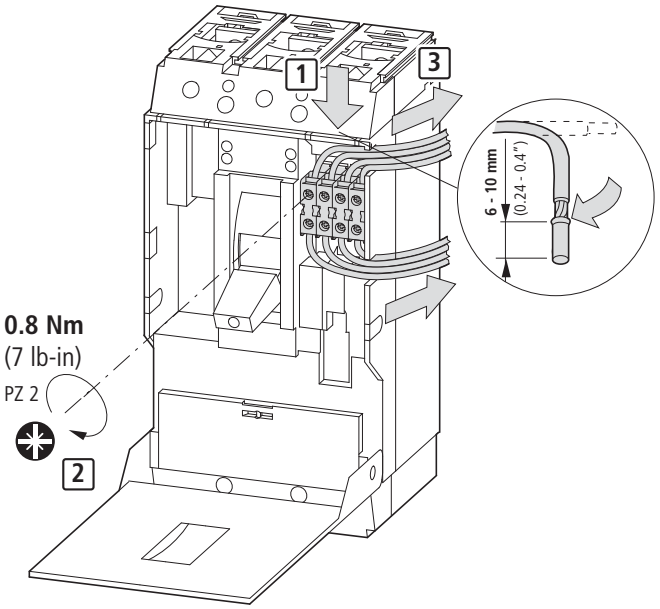

5b M22-CK10, M22-CK01

(Clamp Terminals)

	2 x 0.75 – 2.5 mm^2 2 x AWG 18 – AWG 14
	UL/CSA = Cu only

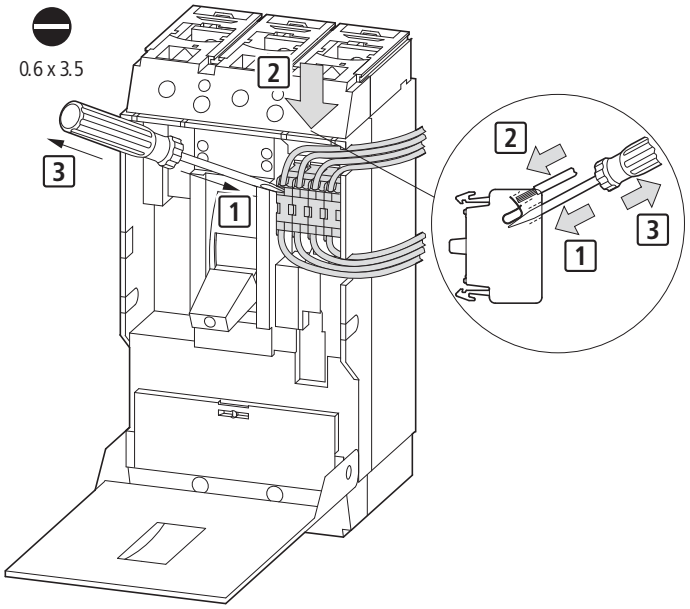

5c M22-CK11, M22-CK20, M22-CK02

(Clamp Terminals)

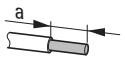

a = 8 mm
(a = 0.32")

	1 x 0.5 – 1.5 mm^2 1 x AWG 20 – AWG 16 2 x 0.5 – 0.75 mm^2 2 x AWG 20 – AWG 18

6

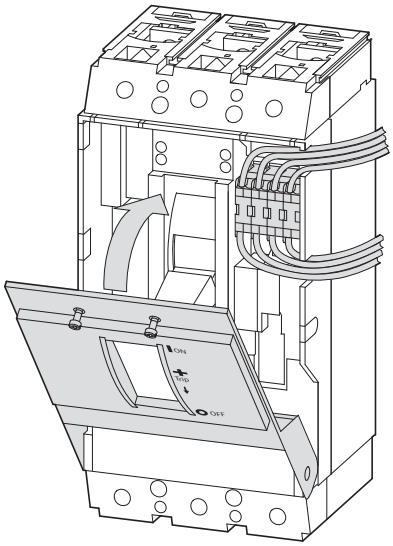

7

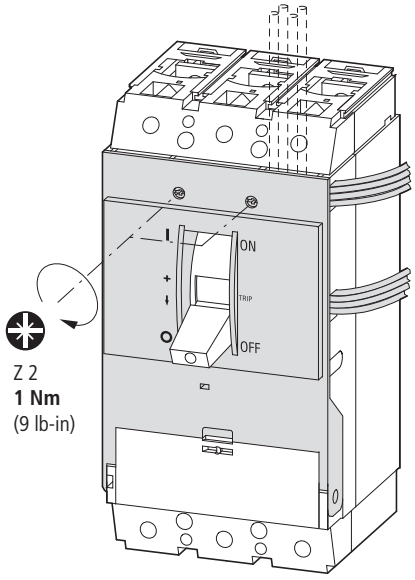

11/18 IL01208009Z

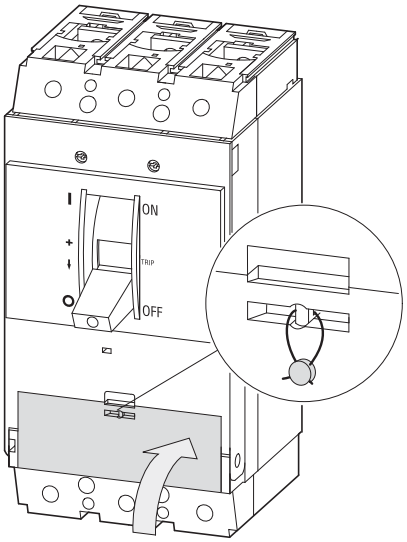

TEST 1

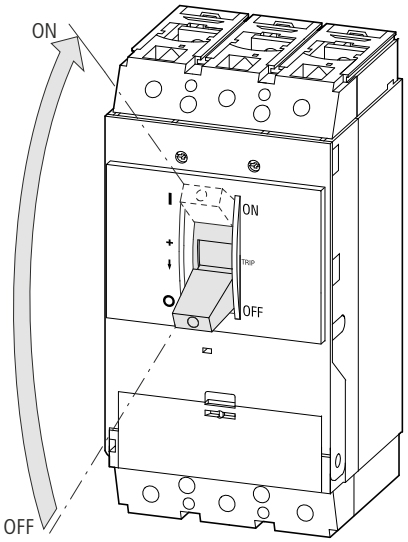

TEST 2

~~PN3 ...~~

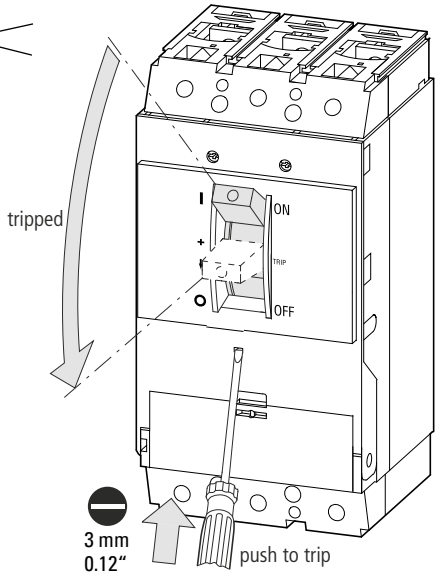

TEST 3

~~PN3 ...~~

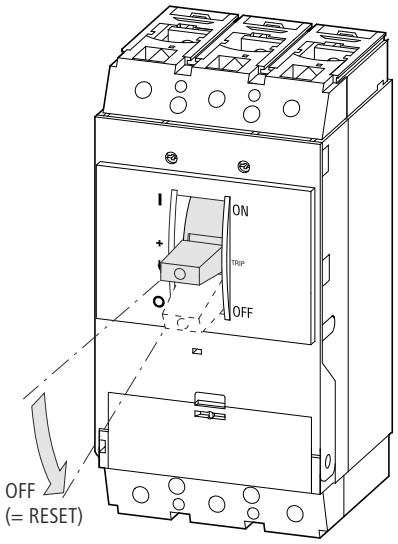

11/18 IL012080092

Dismounting – Demontage – Démontage – Desmontaje – Smontaggio – 拆卸 – Демонтаж

1

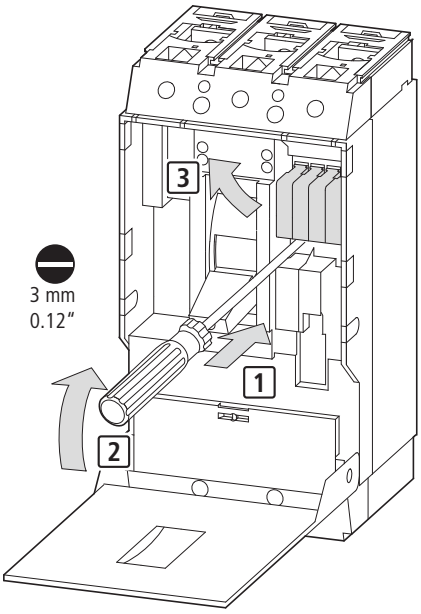

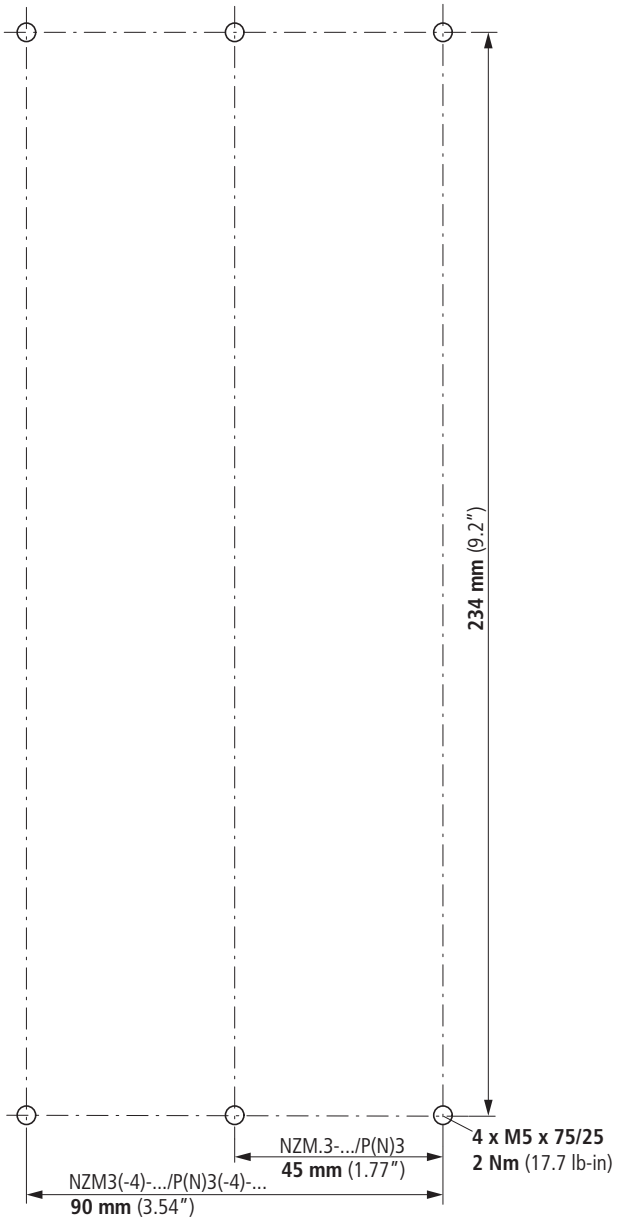

11/18 IL01208009Z

Wiring terminations circuit breaker type NZM…3…-NA (CNA)
Wiring terminations molded case switch type NS3…-NA

	Connector Type	Wire size	Wire 75° C	Max. A-Rating	Tightening-Torque
1)	Bolt on			600	31 Nm (275 lb-in)
	NZM3-XKA2	2 x AWG 1/0 – 500 kcmil	Cu only	550	31 Nm (275 lb-in)
	NZM3-XKC	1 x AWG 1/0 – 500 kcmil	Cu only	400	19 Nm (168 lb-in)
2)	integrated Auxiliary Terminal	1 x AWG 12 – 18	Cu only		1.2 Nm (11 lb-in)

1) Connector Pads Type NZM3-XKS for Compression Crimp lugs supplied standard on all NZM3 circuit breakers and switches.
2) Integrated Auxiliary Terminal on Barrel (Tunnel) Mechanical lug Connector Type NZM3-XKA(1)(2) only.

Eaton Industries GmbH, Hein-Moeller-Straße 7-11, 53115 Bonn, Germany
© 2000 by Eaton Industries GmbH, www.eaton.eu/documentation All Rights Reserved
11/18 IL01208009Z 10055607
Printed in Germany (11/18)