NU 2212 ECP

Popular item
SKF Explorer

Dimensions

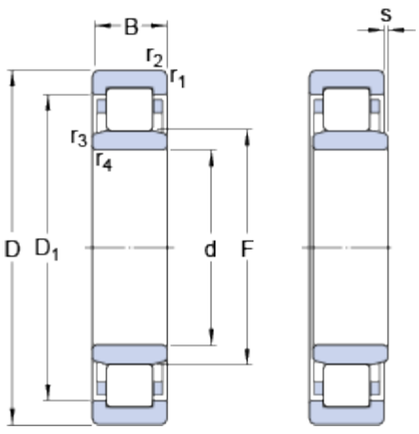

d		60	mm
D		110	mm
B		28	mm
D_1	≈	95	mm
F		72	mm
$r_{1,2}$	min.	1.5	mm
$r_{3,4}$	min.	1.5	mm
s	max.	1.4	mm

Abutment dimensions

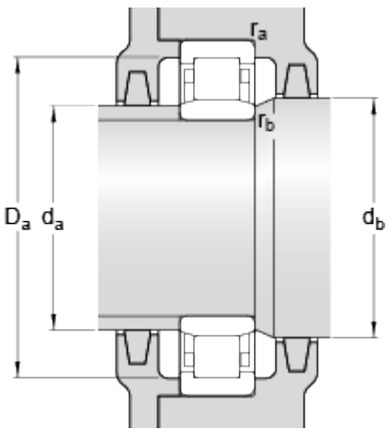

d_a	min.	68	mm
d_a	max.	70	mm
d_b	min.	74	mm
D_a	max.	101	mm
r_a	max.	1.5	mm
r_b	max.	1.5	mm

Calculation data

Basic dynamic load rating	C	146	kN
Basic static load rating	C_0	153	kN
Fatigue load limit	P_u	20	kN
Reference speed		6700	r/min
Limiting speed		7500	r/min
Calculation factor	k_r	0.2	
Limiting value	e	0.3	
Axial load factor	Y	0.4	

Mass

Mass bearing	1.05	kg

Associated products

Angle ring	HJ 212 EC