Series 18

Characteristics
The compact 8 mm Series 18 is especially suited for:

- Flush design
- Raised design
- PCB (with adaptor)

Functions
The Series 18 incorporates the following functions:

- Indicator
- Pushbutton
- Illuminated pushbutton

Market segments
The EAO Series 18 is especially suited for applications in the segments:

- Audio and video
- Laboratory and measuring equipment

Please refer to the EAO website to obtain detailed information regarding this series **www.products.eao.com**
Configure a product to your exact needs and request a quotation.



Overview

Flush design	
Indicator	4
Pushbutton	6
Illuminated pushbutton	7
Raised design	
Indicator	8
Pushbutton	10
Illuminated pushbutton	12
Accessories	**14**
Drawings	**20**
Technical data	**21**
Application guidelines	**22**
Index	**23**

18 Flush design

Indicator, IP 40



Product can differ from the current configuration.

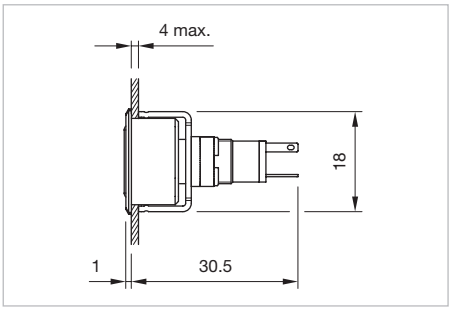

Dimensions [mm]

Additional Information

- For front dimensions 19 x 19 mm or Ø 19mm
- Luminosity and wave length variations caused by LED manufacturing processes may cause slight differences regarding the illumination
- The series resistance for LEDs need to be determined and integrated by customers.

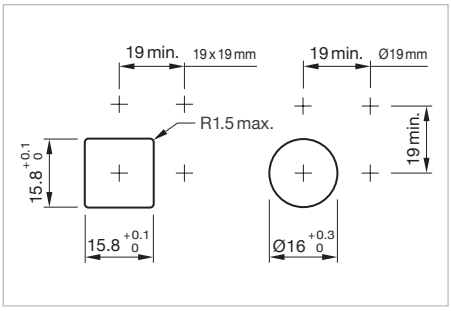

Mounting cut-outs [mm]

Equipment consisting of (schematic overview)



Lens

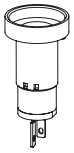

Actuator

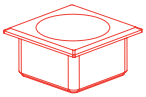

Front bezel set *page 16*





Fixing nut

Each Part Number listed below includes all the black components shown in the 3D-drawing.

To obtain a complete unit, please select the red components from the pages shown.

LED colour	Forward voltage typ.	Operating voltage	Operation current	Lens	Terminal	Part No.	Compo-nent layout	Wiring diagram	Weight
 **Indicator actuator**									
red	2.0 VDC @ 20 mA	customer-specific	10 mA	Plastic red translucent	Solder	**18-080.0052L**	1	1	0.002 kg
white	3.0 VDC @ 20 mA	customer-specific	10 mA	Plastic yellow translucent	Solder	**18-080.0054L**	1	1	0.002 kg
green	3.2 VDC @ 20 mA	customer-specific	2 mA	Plastic green translucent	Solder	**18-080.0055L**	1	1	0.002 kg
		12 VDC ±10 %	10 mA	Plastic red translucent	Solder	**18-081.0052L**	1	1	0.002 kg
			10 mA	Plastic yellow translucent	Solder	**18-081.0054L**	1	1	0.002 kg
			2 mA	Plastic green translucent	Solder	**18-081.0055L**	1	1	0.002 kg
		24 VDC ±10 %	10 mA	Plastic red translucent	Solder	**18-082.0052L**	1	1	0.002 kg
			10 mA	Plastic yellow translucent	Solder	**18-082.0054L**	1	1	0.002 kg
			2 mA	Plastic green translucent	Solder	**18-082.0055L**	1	1	0.002 kg

LED colour	Forward voltage typ.	Operating voltage	Operation current	Lens	Terminal	Part No.	Compo-nent layout	Wiring diagram	Weight
 **Indicator actuator**									
red	2.0 VDC @ 20 mA	customer-specific	10 mA	Plastic red translucent	Solder	**18-060.0052L**	1	1	0.002 kg
white	3.0 VDC @ 20 mA	customer-specific	10 mA	Plastic yellow translucent	Solder	**18-060.0054L**	1	1	0.002 kg
green	3.2 VDC @ 20 mA	customer-specific	2 mA	Plastic green translucent	Solder	**18-060.0055L**	1	1	0.002 kg
		12 VDC ±10 %	10 mA	Plastic red translucent	Solder	**18-061.0052L**	1	1	0.002 kg
			10 mA	Plastic yellow translucent	Solder	**18-061.0054L**	1	1	0.002 kg
			2 mA	Plastic green translucent	Solder	**18-061.0055L**	1	1	0.002 kg
		24 VDC ±10 %	10 mA	Plastic red translucent	Solder	**18-062.0052L**	1	1	0.002 kg
			10 mA	Plastic yellow translucent	Solder	**18-062.0054L**	1	1	0.002 kg
			2 mA	Plastic green translucent	Solder	**18-062.0055L**	1	1	0.002 kg

The component layouts you will find from page 20



Wiring diagram 1

18 Flush design

Pushbutton, IP 40



Product can differ from the current configuration.

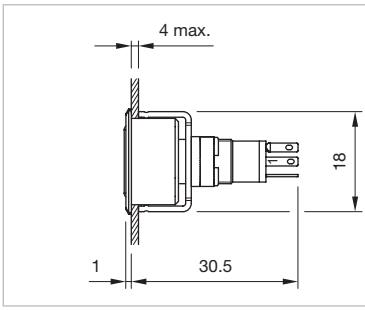

Dimensions [mm]

Additional Information

- For front dimensions 19 x 19 mm or Ø 19mm
- +/- terminals are not connected

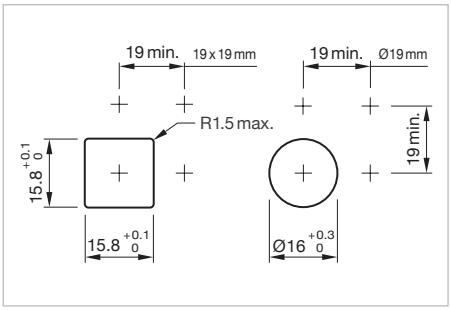

Mounting cut-outs [mm]

Equipment consisting of (schematic overview)

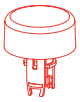

Lens *page 14*

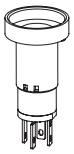

Actuator

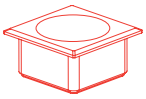

Front bezel set *page 16*





Fixing nut

Each Part Number listed below includes all the black components shown in the 3D-drawing.

To obtain a complete unit, please select the red components from the pages shown.

Switching system	Contacts	Switching action	Terminal	Part No.	Component layout	Wiring diagram	Weight
 **Pushbutton actuator**							
Snap-action switching element	1 NC	B	Solder	**18-188.035**	2	1	0.002 kg
		C	Solder	**18-288.035**	2	2	0.002 kg
	1 NO	B	Solder	**18-187.035**	2	3	0.002 kg
		C	Solder	**18-287.035**	2	4	0.002 kg
 **Pushbutton actuator**							
Snap-action switching element	1 NC	B	Solder	**18-168.035**	2	1	0.002 kg
		C	Solder	**18-268.035**	2	2	0.002 kg
	1 NO	B	Solder	**18-167.035**	2	3	0.002 kg
		C	Solder	**18-267.035**	2	4	0.002 kg

Contacts: NC = Normally closed, NO = Normally open
Switching action: B = Momentary, C = Maintain
The component layouts you will find from page 20

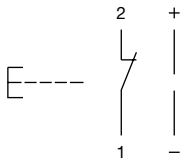

Wiring diagram 1

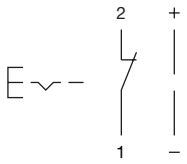

Wiring diagram 2

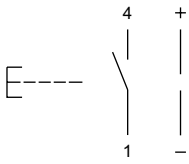

Wiring diagram 3

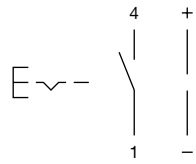

Wiring diagram 4

Illuminated pushbutton, IP 40

Equipment consisting of (schematic overview)

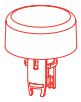

Lens *page 14*

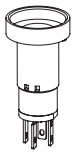

Actuator

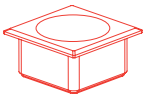

Front bezel set *page 16*





Fixing nut

Each Part Number listed below includes all the black components shown in the 3D-drawing.

To obtain a complete unit, please select the red components from the pages shown.

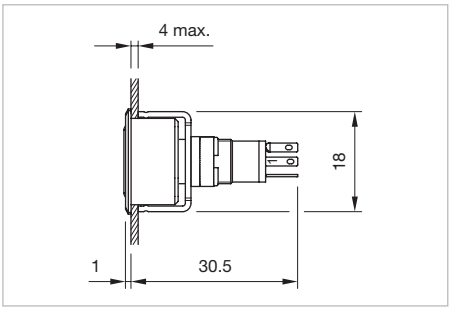

Dimensions [mm]

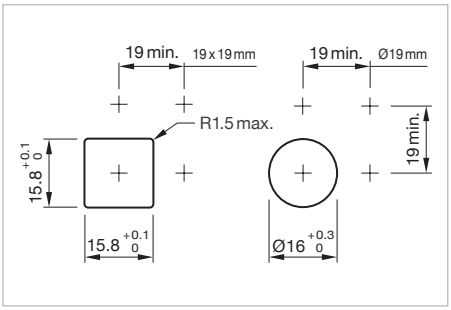

Mounting cut-outs [mm]



Product can differ from the current configuration.

Additional Information

- For front dimensions 19 x 19 mm or Ø 19mm

Switching system	Contacts	Switching action	Terminal	Part No.	Component layout	Wiring diagram	Weight
 **Illuminated pushbutton actuator**							
Snap-action switching element	1 NC	B	Solder	**18-188.035**	2	1	0.002 kg
		C	Solder	**18-288.035**	2	2	0.002 kg
	1 NO	B	Solder	**18-187.035**	2	3	0.002 kg
		C	Solder	**18-287.035**	2	4	0.002 kg
 **Illuminated pushbutton actuator**							
Snap-action switching element	1 NC	B	Solder	**18-168.035**	2	1	0.002 kg
		C	Solder	**18-268.035**	2	2	0.002 kg
	1 NO	B	Solder	**18-167.035**	2	3	0.002 kg
		C	Solder	**18-267.035**	2	4	0.002 kg

Contacts: NC = Normally closed, NO = Normally open
Switching action: B = Momentary, C = Maintain
The component layouts you will find from page 20

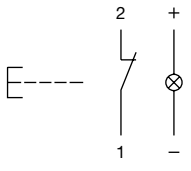

Wiring diagram 1

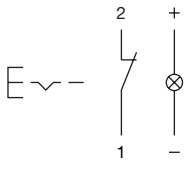

Wiring diagram 2

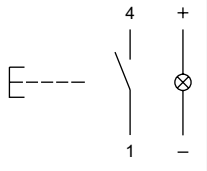

Wiring diagram 3

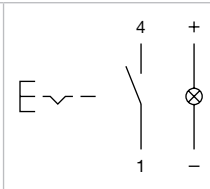

Wiring diagram 4

18 Raised design

Indicator, IP 40



Product can differ from the current configuration.

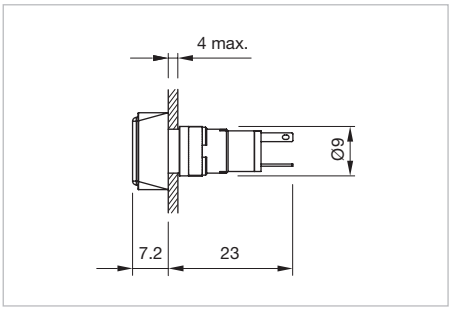

Dimensions [mm]

Equipment consisting of (schematic overview)



Lens

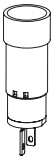

Actuator



Fixing nut

Each Part Number listed below includes all the black components shown in the 3D-drawing.

Additional Information

- Luminosity and wave length variations caused by LED manufacturing processes may cause slight differences regarding the illumination
- The series resistance for LEDs need to be determined and integrated by customers.

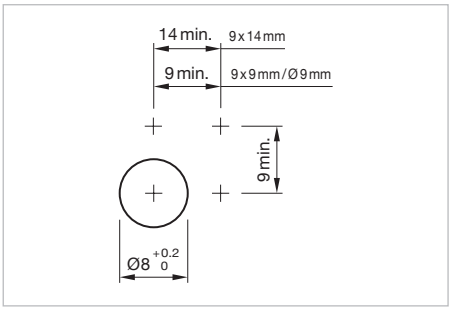

Mounting cut-outs [mm]

LED colour	Forward voltage typ.	Operating voltage	Operation current	Lens	Terminal	Part No.	Compo-nent layout	Wiring diagram	Weight
 **Indicator actuator, Front dimension 9 x 9 mm**									
red	2.0 VDC @ 20 mA	customer-specific	10 mA	Plastic red translucent	Solder	**18-050.0052L**	1	1	0.002 kg
white	3.0 VDC @ 20 mA	customer-specific	10 mA	Plastic yellow translucent	Solder	**18-050.0054L**	1	1	0.002 kg
green	3.2 VDC @ 20 mA	customer-specific	2 mA	Plastic green translucent	Solder	**18-050.0055L**	1	1	0.002 kg
		12 VDC ±10 %	10 mA	Plastic red translucent	Solder	**18-051.0052L**	1	1	0.002 kg
			10 mA	Plastic yellow translucent	Solder	**18-051.0054L**	1	1	0.002 kg
			2 mA	Plastic green translucent	Solder	**18-051.0055L**	1	1	0.002 kg
		24 VDC ±10 %	10 mA	Plastic red translucent	Solder	**18-052.0052L**	1	1	0.002 kg
			10 mA	Plastic yellow translucent	Solder	**18-052.0054L**	1	1	0.002 kg
			2 mA	Plastic green translucent	Solder	**18-052.0055L**	1	1	0.002 kg
 **Indicator actuator, Front dimension 9 x 14 mm**									
red	2.0 VDC @ 20 mA	customer-specific	10 mA	Plastic red translucent	Solder	**18-040.0052L**	1	1	0.002 kg
white	3.0 VDC @ 20 mA	customer-specific	10 mA	Plastic yellow translucent	Solder	**18-040.0054L**	1	1	0.002 kg
green	3.2 VDC @ 20 mA	customer-specific	2 mA	Plastic green translucent	Solder	**18-040.0055L**	1	1	0.002 kg
		12 VDC ±10 %	10 mA	Plastic red translucent	Solder	**18-041.0052L**	1	1	0.002 kg
			10 mA	Plastic yellow translucent	Solder	**18-041.0054L**	1	1	0.002 kg
			2 mA	Plastic green translucent	Solder	**18-041.0055L**	1	1	0.002 kg
		24 VDC ±10 %	10 mA	Plastic red translucent	Solder	**18-042.0052L**	1	1	0.002 kg
			10 mA	Plastic yellow translucent	Solder	**18-042.0054L**	1	1	0.002 kg
			2 mA	Plastic green translucent	Solder	**18-042.0055L**	1	1	0.002 kg

LED colour	Forward voltage typ.	Operating voltage	Operation current	Lens	Terminal	Part No.	Compo-nent layout	Wiring diagram	Weight
 **Indicator actuator, Front dimension Ø 9 mm**									
red	2.0 VDC @ 20 mA	customer-specific	10 mA	Plastic red translucent	Solder	**18-030.0052L**	1	1	0.002 kg
white	3.0 VDC @ 20 mA	customer-specific	10 mA	Plastic yellow translucent	Solder	**18-030.0054L**	1	1	0.002 kg
green	3.2 VDC @ 20 mA	customer-specific	2 mA	Plastic green translucent	Solder	**18-030.0055L**	1	1	0.002 kg
		12 VDC ±10 %	10 mA	Plastic red translucent	Solder	**18-031.0052L**	1	1	0.002 kg
			10 mA	Plastic yellow translucent	Solder	**18-031.0054L**	1	1	0.002 kg
			2 mA	Plastic green translucent	Solder	**18-031.0055L**	1	1	0.002 kg
		24 VDC ±10 %	10 mA	Plastic red translucent	Solder	**18-032.0052L**	1	1	0.002 kg
			10 mA	Plastic yellow translucent	Solder	**18-032.0054L**	1	1	0.002 kg
			2 mA	Plastic green translucent	Solder	**18-032.0055L**	1	1	0.002 kg

The component layouts you will find from page 20



Wiring diagram 1

18 Raised design

Pushbutton, IP 40



Product can differ from the current configuration.

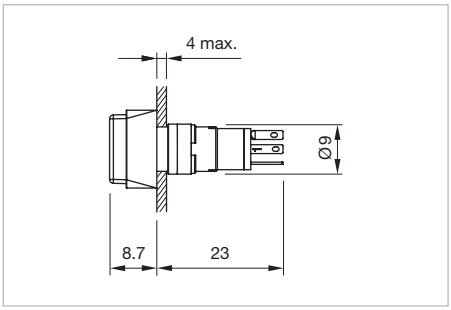

Dimensions [mm]

Additional Information

- +/- terminals are not connected

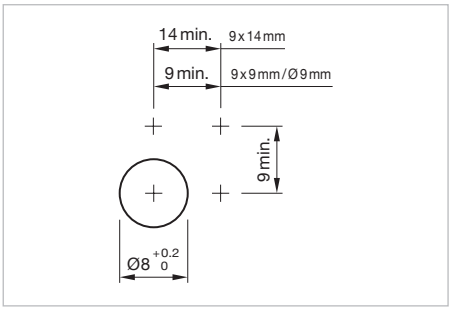

Mounting cut-outs [mm]

Equipment consisting of (schematic overview)



Lens *page 14*

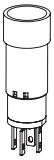

Actuator



Fixing nut

Each Part Number listed below includes all the black components shown in the 3D-drawing.

To obtain a complete unit, please select the red components from the pages shown.

Switching system	Contacts	Switching action	Terminal	Part No.	Component layout	Wiring diagram	Weight
 **Pushbutton actuator, Front dimension 9 x 9 mm**							
Snap-action switching element	1 NC	B	Solder	**18-158.035**	2	1	0.002 kg
		C	Solder	**18-258.035**	2	2	0.002 kg
	1 NO	B	Solder	**18-157.035**	2	3	0.002 kg
		C	Solder	**18-257.035**	2	4	0.002 kg
 **Pushbutton actuator, Front dimension 9 x 14 mm**							
Snap-action switching element	1 NC	B	Solder	**18-148.035**	2	1	0.002 kg
		C	Solder	**18-248.035**	2	2	0.002 kg
	1 NO	B	Solder	**18-147.035**	2	3	0.002 kg
		C	Solder	**18-247.035**	2	4	0.002 kg
 **Pushbutton actuator, Front dimension Ø 9 mm**							
Snap-action switching element	1 NC	B	Solder	**18-138.035**	2	1	0.002 kg
		C	Solder	**18-238.035**	2	2	0.002 kg
	1 NO	B	Solder	**18-137.035**	2	3	0.002 kg
		C	Solder	**18-237.035**	2	4	0.002 kg

Contacts: NC = Normally closed, NO = Normally open
Switching action: B = Momentary, C = Maintain
The component layouts you will find from page 20

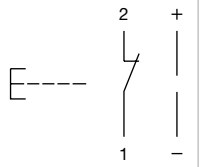

Wiring diagram 1

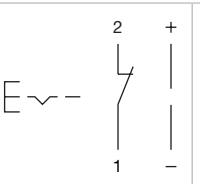

Wiring diagram 2

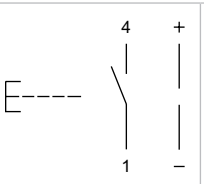

Wiring diagram 3

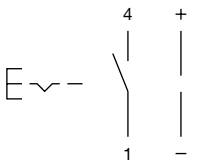

Wiring diagram 4

18 Raised design

Illuminated pushbutton, IP 40



Product can differ from the current configuration.

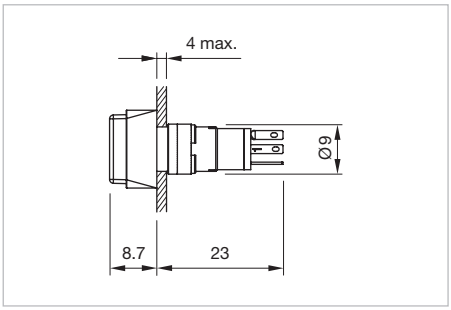

Dimensions [mm]

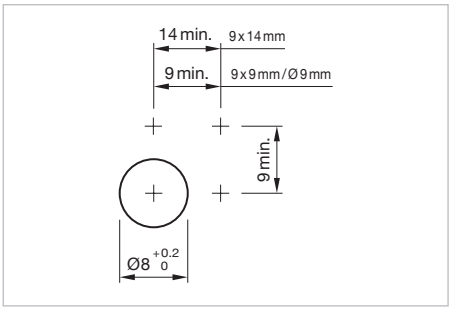

Mounting cut-outs [mm]

Equipment consisting of (schematic overview)



Lens *page 14*

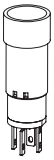

Actuator



Fixing nut

Each Part Number listed below includes all the black components shown in the 3D-drawing.

To obtain a complete unit, please select the red components from the pages shown.

Switching system	Contacts	Switching action	Terminal	Part No.	Component layout	Wiring diagram	Weight
 **Illuminated pushbutton actuator, Front dimension 9 x 9 mm**							
Snap-action switching element	1 NC	B	Solder	**18-158.035**	2	1	0.002 kg
		C	Solder	**18-258.035**	2	2	0.002 kg
	1 NO	B	Solder	**18-157.035**	2	3	0.002 kg
		C	Solder	**18-257.035**	2	4	0.002 kg
 **Illuminated pushbutton actuator, Front dimension 9 x 14 mm**							
Snap-action switching element	1 NC	B	Solder	**18-148.035**	2	1	0.002 kg
		C	Solder	**18-248.035**	2	2	0.002 kg
	1 NO	B	Solder	**18-147.035**	2	3	0.002 kg
		C	Solder	**18-247.035**	2	4	0.002 kg
 **Illuminated pushbutton actuator, Front dimension Ø 9 mm**							
Snap-action switching element	1 NC	B	Solder	**18-138.035**	2	1	0.002 kg
		C	Solder	**18-238.035**	2	2	0.002 kg
	1 NO	B	Solder	**18-137.035**	2	3	0.002 kg
		C	Solder	**18-237.035**	2	4	0.002 kg

Contacts: NC = Normally closed, NO = Normally open
Switching action: B = Momentary, C = Maintain
The component layouts you will find from page 20

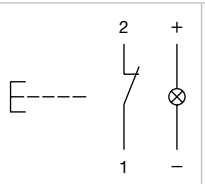

Wiring diagram 1

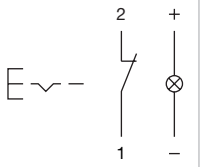

Wiring diagram 2

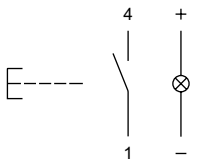

Wiring diagram 3

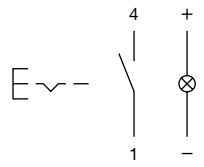

Wiring diagram 4

Front

Lens without LED flush design

Dimension	Lens	Part No.	Weight
 **Lens without LED flush design**			
13.8 x 13.8 mm	Plastic black opaque	**18-982.0**	0.001 kg
	Plastic red translucent	**18-982.2**	0.001 kg
	Plastic yellow translucent	**18-982.4**	0.001 kg
	Plastic green translucent	**18-982.5**	0.001 kg
	Plastic grey opaque	**18-982.8**	0.001 kg
	Plastic white translucent	**18-982.9**	0.001 kg
 **Lens without LED flush design**			
Ø 13.8 mm	Plastic black opaque	**18-962.0**	0.001 kg
	Plastic red translucent	**18-962.2**	0.001 kg
	Plastic yellow translucent	**18-962.4**	0.001 kg
	Plastic green translucent	**18-962.5**	0.001 kg
	Plastic grey opaque	**18-962.8**	0.001 kg
	Plastic white translucent	**18-962.9**	0.001 kg

Lens with LED flush design

Additional Information

- Luminosity and wave length variations caused by LED manufacturing processes may cause slight differences regarding the illumination

Dimension	Lens	Part No.	Weight
 **Lens with LED flush design**			
13.8 x 13.8 mm	Plastic red translucent	**18-981.2L**	0.001 kg
	Plastic yellow translucent	**18-981.4L**	0.001 kg
	Plastic green translucent	**18-981.5L**	0.001 kg
 **Lens with LED flush design**			
Ø 13.8 mm	Plastic red translucent	**18-961.2L**	0.001 kg
	Plastic yellow translucent	**18-961.4L**	0.001 kg
	Plastic green translucent	**18-961.5L**	0.001 kg

Lens without LED raised design

Dimension	Lens	Part No.	Weight
 **Lens without LED raised design**			
7.5 x 7.5 mm	Plastic black opaque	**18-952.0**	0.001 kg
	Plastic red translucent	**18-952.2**	0.001 kg
	Plastic yellow translucent	**18-952.4**	0.001 kg
	Plastic green translucent	**18-952.5**	0.001 kg
	Plastic grey opaque	**18-952.8**	0.001 kg
	Plastic white translucent	**18-952.9**	0.001 kg
 **Lens without LED raised design**			
7.5 x 12.5 mm	Plastic black opaque	**18-942.0**	0.001 kg
	Plastic red translucent	**18-942.2**	0.001 kg
	Plastic yellow translucent	**18-942.4**	0.001 kg
	Plastic green translucent	**18-942.5**	0.001 kg
	Plastic grey opaque	**18-942.8**	0.001 kg
	Plastic white translucent	**18-942.9**	0.001 kg
 **Lens without LED raised design**			
Ø 7.5 mm	Plastic black opaque	**18-932.0**	0.001 kg
	Plastic red translucent	**18-932.2**	0.001 kg
	Plastic yellow translucent	**18-932.4**	0.001 kg
	Plastic green translucent	**18-932.5**	0.001 kg
	Plastic grey opaque	**18-932.8**	0.001 kg
	Plastic white translucent	**18-932.9**	0.001 kg

Lens with LED raised design

Additional Information

- Without built-in series resistor, typical forward voltage 2.2 VDC @ 20 mA
- Luminosity and wave length variations caused by LED manufacturing processes may cause slight differences regarding the illumination

Dimension	Lens	Part No.	Weight
 **Lens with LED raised design**			
7.5 x 7.5 mm	Plastic red translucent	**18-951.2L**	0.001 kg
	Plastic yellow translucent	**18-951.4L**	0.001 kg
	Plastic green translucent	**18-951.5L**	0.001 kg
 **Lens with LED raised design**			
7.5 x 12.5 mm	Plastic red translucent	**18-941.2L**	0.001 kg
	Plastic yellow translucent	**18-941.4L**	0.001 kg
	Plastic green translucent	**18-941.5L**	0.001 kg
 **Lens with LED raised design**			
Ø 7.5 mm	Plastic red translucent	**18-931.2L**	0.001 kg
	Plastic yellow translucent	**18-931.4L**	0.001 kg
	Plastic green translucent	**18-931.5L**	0.001 kg

Front bezel set

Product attribute	Mounting cut-out	Front bezel	Part No.	Weight
 **Front bezel set, flush design, Front dimension 19 x 19 mm**				
for square lens	15.8 x 15.8 mm	Plastic black	**18-920.1**	0.006 kg
 **Front bezel set, flush design, Front dimension 19 x 19 mm**				
for round lens	15.8 x 15.8 mm	Plastic black	**18-920.2**	0.006 kg
 **Front bezel set, flush design, Front dimension Ø 19 mm**				
for round lens	Ø 16 mm	Plastic black	**18-920.3**	0.006 kg

Blind plug

Additional Information

- The dimensions of the mounting cut-outs are shown in the product details

Dimension	Mounting cut-out	Material	Colour	Part No.	Weight
 **Blind plug**					
9 x 9 mm	Ø 8 mm	Plastic	black	**19-948.0**	0.001 kg
 **Blind plug**					
Ø 9 mm	Ø 8 mm	Plastic	black	**19-949.0**	0.001 kg

Rear side

PCB plug-in base

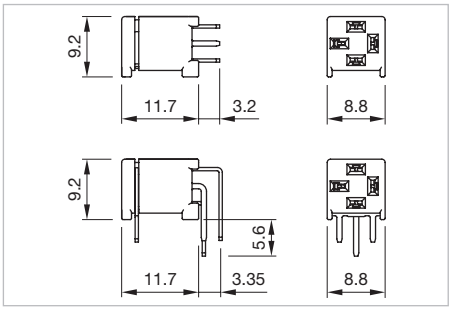

Dimensions [mm]

pins	Terminal	Part No.	Compo-nent layout	Weight
 **PCB plug-in base**				
axial	PCB	**18-945**	3	0.001 kg
 **PCB plug-in base**				
right-angled	PCB	**18-946**	4	0.001 kg

The component layouts you will find from page 20

Mounting

Lens remover

Part No.	Weight
 **Lens remover**	
18-910	0.002 kg

Mounting tool

Additional Information

- For fixing nut long Part No. 19-991

Part No.	Weight
 **Mounting tool**	
19-905	0.011 kg

18 Drawings

Drawings

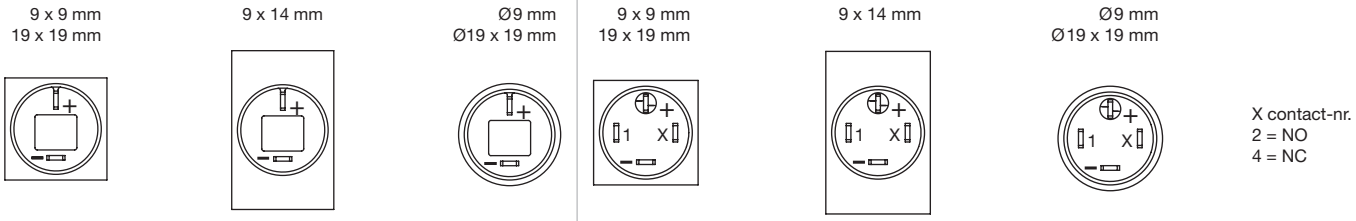

Component layout 1

Component layout 2

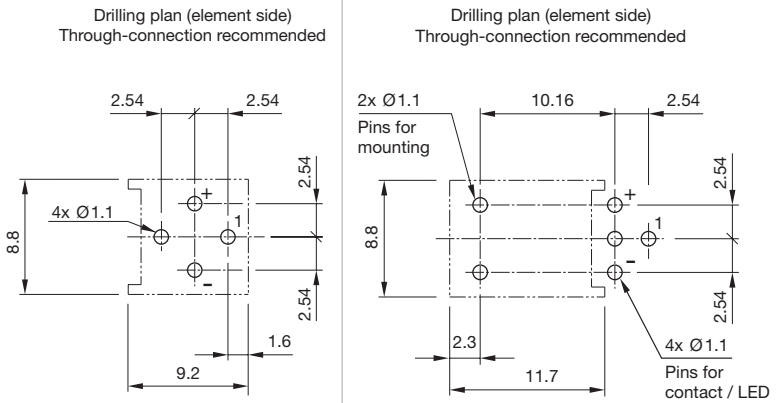

Component layout 3

Component layout 4

Actuator with snap-action switching element

Switching system

The snap-action switching system was designed for switching low powers in electronic circuits.
Single-break snap-action contact.

Material

Lens
Polymethylacrylate (PMMA), Polycarbonate (PC)

Material of contact
Gold contact on nickel plating

Actuator housing
Polyamide, colour black

Mechanical characteristics

Terminals
The terminals can be used as soldering terminals.
Max. wire diameter: 2 x 0.5 mm²
Max. wire cross-section of stranded cable 1 x 0.75 mm²
Wire cross-section of terminal 1.6 x 0.4 mm

Tightening torque
for fixing nut max. 20 Ncm

Actuating force
1.4 N

Actuating travel
2.2 mm ±0.2 mm

Rebound time
≤ 2.5 ms

Mechanical lifetime
Momentary action 2 million cycles of operation
Maintained action 1 million cycles of operation,
as per IEC 60512-5-9a

Electrical characteristics

Illumination
Operating voltage LED: 12 VDC ± 10 %
24 VDC ± 10 %
customer-specific *)
*) The series resistance for LEDs need to be determined and integrated by customers.

Operating current:		
	red	typ. 10 mA
	yellow	typ. 10 mA
	green	typ. 2 mA

Contact resistance
≤ 100 mΩ starting value (initial), as per IEC 60512-2-2b

Electrical life
≥ 500 000 cycles of operation at 30 VDC, 100 mA, according to IEC 61058-1

Switch rating
min. 10 µA at 100 µV
max. 100 mA at 42 VAC/VDC

Electric strength
500 VAC, 50 Hz, 1 min. between all terminals and earth,
as per IEC 60512-2-11

Environmental conditions

Storage temperature
-40 °C … +80 °C

Service temperature
-25 °C … +65 °C

Protection degree
IP 40 front side, as per IEC 60529

Shock resistance
(Single impacts, semi-sinusodial)
50 g for 11 ms, as per IEC 60068-2-27

Vibration resistance
(sinusoidal) 10 g at 10 – 2000 Hz, amplitude 0.75 mm,
as per IEC 60512-4-4

EAO reserves the right to alter specifications without further notice.

18 Application guidelines

Suppressor circuits

When switching inductive loads such as relays, DC motors, and DC solenoids, it is always important to absorb surges (e. g. with a diode) to protect the contacts. When these inductive loads are switched off, a counter emf can severely damage switch contacts and greatly shorten lifetime.

Fig. 1 shows an inductive load with a free-wheeling diode connected in parallel. This free-wheeling diode provides a path for the inductor current to flow when the current is interrupted by the switch. Without this free-wheeling diode, the voltage across the coil will be limited only by dielectric breakdown voltages of the circuit or parasitic elements of the coil. This voltage can be kilovolts in amplitude even when nominal circuit voltages are low (e. g. 12 VDC) see Fig. 2.

The free-wheeling diode should be chosen so that the reverse breakdown voltage is greater than the voltage driving the inductive load. The DC blocking voltage (VR) of the free-wheeling diode can be found in the datasheet of a diode. The forward current should be equal or greater than the maximum current flowing through the load.

To get an efficient protection, the free-wheeling diode must be connected as close as possible to the inductive load!

Switching with inductive load
Fig. 1

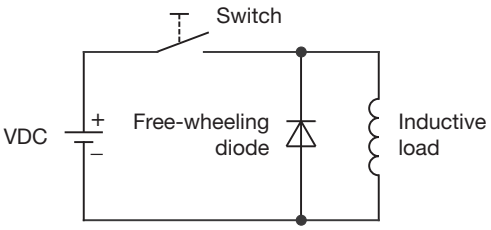

Counter EMF
over load without free-wheeling diode
Fig. 2

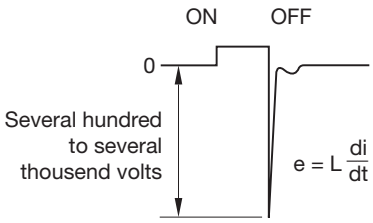

Index from Part No.

Part No.	Page
18-030.0052L	9
18-030.0054L	9
18-030.0055L	9
18-031.0052L	9
18-031.0054L	9
18-031.0055L	9
18-032.0052L	9
18-032.0054L	9
18-032.0055L	9
18-040.0052L	8
18-040.0054L	8
18-040.0055L	8
18-041.0052L	8
18-041.0054L	8
18-041.0055L	8
18-042.0052L	8
18-042.0054L	8
18-042.0055L	8
18-050.0052L	8
18-050.0054L	8
18-050.0055L	8
18-051.0052L	8
18-051.0054L	8
18-051.0055L	8
18-052.0052L	8
18-052.0054L	8
18-052.0055L	8
18-060.0052L	5
18-060.0054L	5
18-060.0055L	5
18-061.0052L	5
18-061.0054L	5
18-061.0055L	5
18-062.0052L	5
18-062.0054L	5
18-062.0055L	5
18-080.0052L	4
18-080.0054L	4
18-080.0055L	4
18-081.0052L	4
18-081.0054L	4
18-081.0055L	4
18-082.0052L	4
18-082.0054L	4
18-082.0055L	4
18-137.035	10
18-137.035	12
18-138.035	10
18-138.035	12
18-147.035	10
18-147.035	12
18-148.035	10
18-148.035	12
18-157.035	10
18-157.035	12
18-158.035	10
18-158.035	12
18-167.035	6
18-167.035	7
18-168.035	6
18-168.035	7
18-187.035	6
18-187.035	7
18-188.035	6
18-188.035	7
18-237.035	10
18-237.035	12
18-238.035	10
18-238.035	12
18-247.035	10
18-247.035	12
18-248.035	10
18-248.035	12
18-257.035	10
18-257.035	12
18-258.035	10
18-258.035	12
18-267.035	6
18-267.035	7
18-268.035	6
18-268.035	7
18-287.035	6
18-287.035	7
18-288.035	6
18-288.035	7
18-910	19
18-920.1	16
18-920.2	16
18-920.3	16
18-931.2L	16
18-931.4L	16
18-931.5L	16
18-932.0	15
18-932.2	15
18-932.4	15
18-932.5	15
18-932.8	15
18-932.9	15
18-941.2L	16
18-941.4L	16
18-941.5L	16
18-942.0	15
18-942.2	15
18-942.4	15
18-942.5	15
18-942.8	15
18-942.9	15
18-945	18
18-946	18
18-951.2L	16
18-951.4L	16
18-951.5L	16
18-952.0	15
18-952.2	15
18-952.4	15
18-952.5	15
18-952.8	15
18-952.9	15
18-961.2L	14
18-961.4L	14
18-961.5L	14
18-962.0	14
18-962.2	14
18-962.4	14
18-962.5	14
18-962.8	14
18-962.9	14
18-981.2L	14
18-981.4L	14
18-981.5L	14
18-982.0	14
18-982.2	14
18-982.4	14
18-982.5	14
18-982.8	14
18-982.9	14
19-905	19
19-948.0	17
19-949.0	17