

ALPHA *Premium* BS STAINLESS STEEL

INDUSTRIES : *food, pharmeutical, chemical industries*
ENVIRONMENTS : *acid, alkaline, humidity*

MAINTENANCE REDUCTION TO ENHANCE YOUR PRODUCTIVITY

Better wear resistance offering an extended lifetime thanks to an innovative technology:

- 304 grade stainless steel with **increased surface hardness**
- Solid bushes
- Extruded rollers
- Chains supplied **pre-lubricated**

Wear test comparing an Alpha Premium STAINLESS STEEL chain with a top range European stainless steel chain

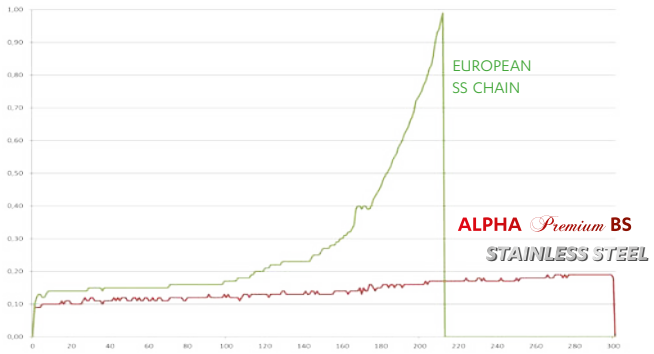

INCREASED BREAKING LOAD

- An improvement of our breaking loads **up to 33%**
- Ultimate Tensile Strength **up to 20% higher** than our European competititors

UTS test comparing an Alpha Premium STAINLESS STEEL chain with a top range European stainless steel chain

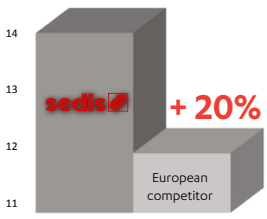

DESIGNED FOR FOOD CONTACT

- Chains are **pre-lubricated with H1 food lube** (temperature of use from -30 to +140°C)
- FOOD SAFE : **Harmless direct contact** with food products
- **Specific lubrication** possible on request

ADAPTATIONS POSSIBLE FOR ALL YOUR APPLICATIONS

- Straight side plates version
- K, M attachments
- Extended pins
- Development of **specific products** adapted to your needs

DIMENSION TABLE

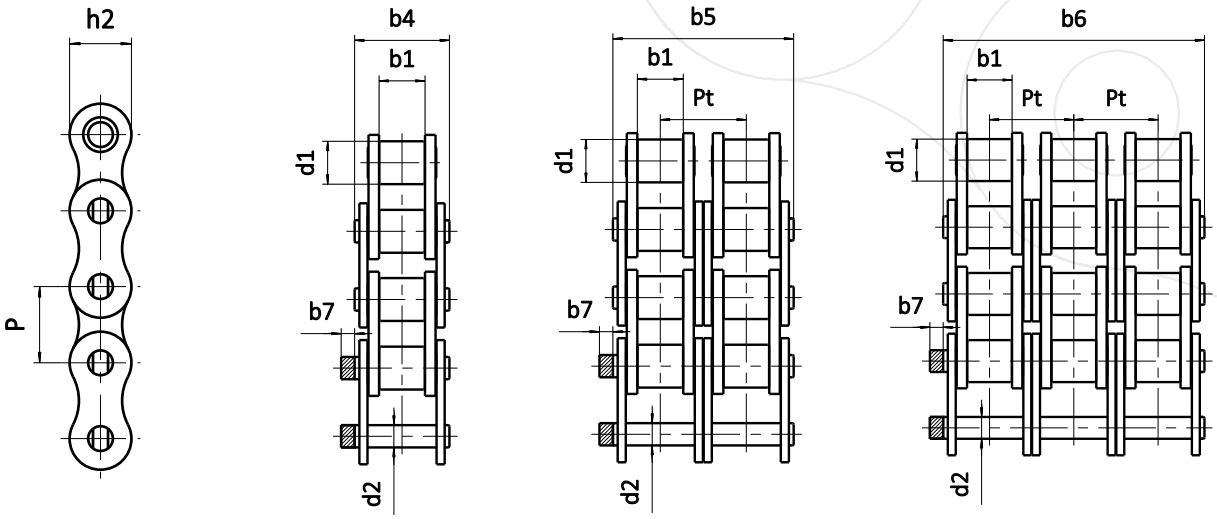

Reference			straight side plate available	Pitch	Principal dimensions (mm)							Breaking load		Weight per meter
	chain type	SEDIS			d1	b1	b4 b5 b6	d2	h2	Pt	b7	Alpha Premium BS STAINLESS STEEL	Percentage of increase	
				P	max.	min.	max.	max.	max.		max.	min. kN	%	kg
SIMPLEX	08B-1 SS	**7NIN**	✓	12,7	8,51	7,75	16,60	4,45	11,80	.	1,5	14	**33 %**	0,68
	10B-1 SS	**11NIN**	✓	15,875	10,16	9,65	19,00	5,08	13,70	.	1,5	17,6	**24 %**	0,86
	12B-1 SS	**13NIN**	✓	19,05	12,07	11,68	22,30	5,72	16,20	.	1,5	21	**27 %**	1,18
	16B-1 SS	**15IN**	✓	25,4	15,88	17,02	35,10	8,28	20,80	.	3,0	43	**16 %**	2,66
DUPLEX	08B-2 SS	**207NIN**	✓	12,7	8,51	7,75	30,60	4,45	11,80	13,92	1,5	28	**33 %**	1,33
	10B-2 SS	**211NIN**	✓	15,875	10,16	9,65	35,75	5,08	13,70	16,59	1,5	35,2	**24 %**	1,70
	12B-2 SS	**213NIN**	✓	19,05	12,07	11,68	41,80	5,72	16,20	19,46	1,5	42	**27 %**	2,35
	16B-2 SS	**215IN**	✓	25,4	15,88	17,02	68,00	8,28	20,80	31,88	3,0	86	**16 %**	5,28
TRIPLEX	08B-3 SS	**307NIN**	✓	12,7	8,51	7,75	44,60	4,45	11,80	13,92	1,5	42	**33 %**	1,96
	10B-3 SS	**311NIN**	✓	15,875	10,16	9,65	52,30	5,08	13,70	16,59	1,5	52,8	**24 %**	2,51
	12B-3 SS	**313NIN**	✓	19,05	12,07	11,68	61,40	5,72	16,20	19,46	1,5	63	**27 %**	3,48
	16B-3 SS	**315IN**	✓	25,4	15,88	17,02	99,90	8,28	20,80	31,88	3,0	129	**16 %**	7,86

Other dimensions available on request

DID YOU KNOW ?

*The Alpha Premium INOX chain lasts on average **TWICE AS LONG** as a top range stainless steel chain of the market*



THE MOST
WEAR RESISTANT
stainless steel chain on the market