datasheet for PL 2600 S W
article number: 934158101



SKS Kontakttechnik GmbH

product description:	order number: 934 158-101
description:	Safety test lead with dual function safety test probe. Tip for penetration of insulation and oxide layers and 4 mm diameter pin for insertion into sockets. 4 mm diameter safety connector with right-angled outlet. Incl. Tip protection
typ:	PL 2600 S W rot/red
system:	4mm safety system
order number:	934 158-101
color	●
other color versions:	●●
technical data	
measurement category	CAT II
norm	DIN EN 61010-031
pin dimensions	4mm
type of contact:	spring mounted pin
type of termination:	4mm diameter pin
cable type:	LEH-XY
cable specification:	high flexible lead
wire stranding:	259 x 0.07
rated voltage:	AC/DC 1000 V
rated current:	16 A
contact resistance:	20 mOhm
cable length:	100cm
conductor size:	1mm²
cable material:	PVC
cable color:	red
material	
contact material:	copper beryllium
contact surface material:	nickel
housing material:	PA
environmental conditions:	
temperature range:	-15 ºC to +70 ºC
inflammable class:	
housing:	94 HB
cable:	94 HB
drawing	

Copyright ©2011 SKS-Kontakttechnik GmbH - printed: Tue Jun 21 2011 10:20:13

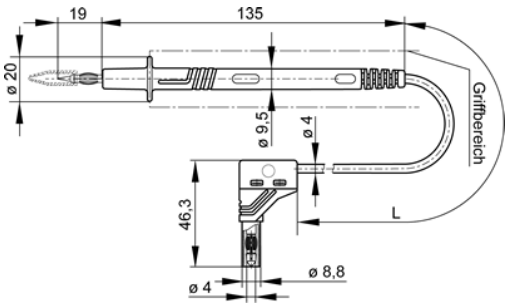

Copyright ©2011 SKS-Kontakttechnik GmbH - printed: Tue Jun 21 2011 10:20:13