»

MICRO-PRUEF MPS 2/0,65 FT

Order-No.:
973 995-100

Miniature test probe with sprung stainless steel probe tip for sampling extremely small measuring points and SMD components. Because the probe tip is sprung, it cannot slip off and provides constant pressure. Connects with MKL...and MAL...

Rated voltage: 60 V DC
Volume resistance: 16 mOhm
Temperature range: -25 °C...+80 °C
Type of connection: one 0.64 mm diameter pin
Colour: black (red = 973 995-101)



technical drawing

Other Products in this group:

MICRO-PRUEF MPS 2/0,65 FT go

Product search:

go

»

MICRO-PRUEF MPS 2/0,65 FT

Order-No.:
973 995-100

Rated voltage: 60 V DC
Volume resistance: 16 mOhm
Temperature range: -25 °C...+80 °C
Type of connection: one 0.64 mm diameter pin
Colour: black (red = 973 995-101)

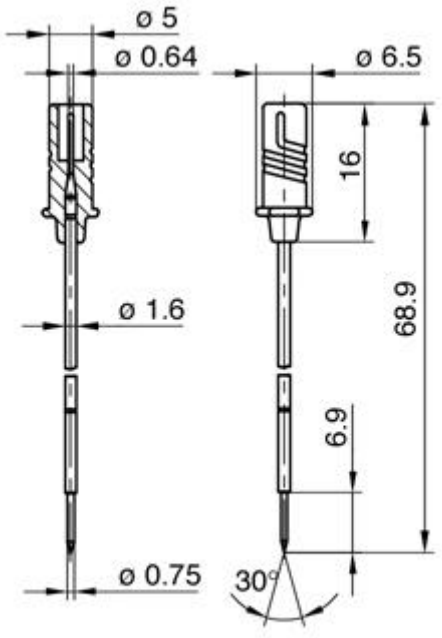

back

MICRO-PRUEF MPS 2/0,65 FT go

Product search: