# DATASHEET - PKZM0-1-T



**Transformer-protective circuit-breaker, 3p, Ir=0.63-1A, screw connection**

| | |
|---|---|
| **Part no.** | **PKZM0-1-T** |
| **Catalog No.** | **088911** |
| **Alternate Catalog No.** | **XTPT001BC1NL** |
| **EL-Nummer (Norway)** | **4315154** |

## Delivery program

| | | | |
|---|---|---|---|
| Product range | | | PKZM0...T transformer-protective circuit-breakers up to 25 A |
| Basic function | | | Transformer protection |
| | | | IE3 |
| Notes | | | Also suitable for motors with efficiency class IE3.<br>IE3-ready devices are identified by the logo on their packaging. |
| Connection technique | | | Screw terminals |
| Contact sequence | | | 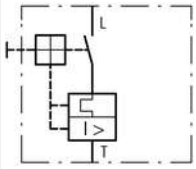 |
| Rated uninterrupted current | $I_u$ | A | 1 |
| **Setting range** | | | |
| Overload releases | $I_r$ | A | 0.63 - 1 |
| short-circuit release | | | |
| max. | $I_{rm}$ | A | 20 |
| Phase-failure sensitivity | | | IEC/EN 60947-4-1, VDE 0660 Part 102 |

**Notes** For the protection of transformers with a high inrush current.
Can be snapped on to IEC/EN 60715 top-hat rail with 7.5 or 15 mm height.

## Technical data

### General

| | | | |
|---|---|---|---|
| Standards | | | IEC/EN 60947, VDE 0660 |
| Climatic proofing | | | Damp heat, constant, to IEC 60068-2-78<br>Damp heat, cyclic, to IEC 60068-2-30 |
| Ambient temperature | | | |
| Storage | | °C | - 40 - 80 |
| Open | | °C | -25 - +55 |
| Enclosed | | °C | - 25 - 40 |
| Mounting position | | | 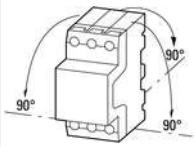 |
| Direction of incoming supply | | | as required |
| Degree of protection | | | |
| Device | | | IP20 |
| Terminations | | | IP00 |
| Protection against direct contact when actuated from front (EN 50274) | | | Finger and back-of-hand proof |
| Mechanical shock resistance half-sinusoidal shock 10 ms to IEC 60068-2-27 | | g | 25 |
| Altitude | | m | Max. 2000 |
| Terminal capacity main cable | | | |

| | | | |
|---|---|---|---|
| Screw terminals | | | |
| Solid | | $mm^2$ | 1 x (1 - 6)<br>2 x (1 - 6) |
| Flexible with ferrule to DIN 46228 | | $mm^2$ | 1 x (1 - 6)<br>2 x (1 - 6) |
| Solid or stranded | | AWG | 18 - 10 |
| Stripping length | | mm | 10 |
| Specified tightening torque for terminal screws | | | |
| Main cable | | Nm | 1.7 |
| Control circuit cables | | Nm | 1 |

### Main conducting paths

| | | | |
|---|---|---|---|
| Rated impulse withstand voltage | $U_{imp}$ | V AC | 6000 |
| Overvoltage category/pollution degree | | | III/3 |
| Rated operational voltage | $U_e$ | V AC | 690 |
| Rated uninterrupted current = rated operational current | $I_u = I_e$ | A | 1 |
| Rated frequency | f | Hz | 40 - 60 |
| Current heat loss (3 pole at operating temperature) | | W | 4.86 |
| Lifespan, mechanical | Operations | $x\ 10^6$ | 0.1 |
| Lifespan, electrical (AC-3 at 400 V) | | | |
| Lifespan, electrical | Operations | $x\ 10^6$ | 0.1 |
| Max. operating frequency | | Ops/h | 40 |
| Short-circuit rating | | | |
| DC | | | |
| Short-circuit rating | | kA | 60 |
| Motor switching capacity | | | |
| AC-3 (up to 690V) | | A | 1 |
| DC-5 (up to 250V) | | A | 1 (3 contacts in series) |

### Trip blocks

| | | | |
|---|---|---|---|
| Temperature compensation | | | |
| to IEC/EN 60947, VDE 0660 | | °C | - 5 … 40 |
| Operating range | | °C | - 25 … 55 |
| Temperature compensation residual error for T > 40 °C | | | ≦ 0.25 %/K |
| Setting range of overload releases | | $x\ I_u$ | 0.6 - 1 |
| short-circuit release | | | Basic device, fixed: $20 x I_u$ |
| Short-circuit release tolerance | | | ± 20% |
| Phase-failure sensitivity | | | IEC/EN 60947-4-1, VDE 0660 Part 102 |

## Design verification as per IEC/EN 61439

| | | | |
|---|---|---|---|
| Technical data for design verification | | | |
| Rated operational current for specified heat dissipation | $I_n$ | A | 1 |
| Heat dissipation per pole, current-dependent | $P_{vid}$ | W | 1.62 |
| Equipment heat dissipation, current-dependent | $P_{vid}$ | W | 4.86 |
| Static heat dissipation, non-current-dependent | $P_{vs}$ | W | 0 |
| Heat dissipation capacity | $P_{diss}$ | W | 0 |
| Operating ambient temperature min. | | °C | -25 |
| Operating ambient temperature max. | | °C | 55 |
| IEC/EN 61439 design verification | | | |
| 10.2 Strength of materials and parts | | | |
| 10.2.2 Corrosion resistance | | | Meets the product standard's requirements. |
| 10.2.3.1 Verification of thermal stability of enclosures | | | Meets the product standard's requirements. |
| 10.2.3.2 Verification of resistance of insulating materials to normal heat | | | Meets the product standard's requirements. |
| 10.2.3.3 Verification of resistance of insulating materials to abnormal heat and fire due to internal electric effects | | | Meets the product standard's requirements. |
| 10.2.4 Resistance to ultra-violet (UV) radiation | | | Meets the product standard's requirements. |
| 10.2.5 Lifting | | | Does not apply, since the entire switchgear needs to be evaluated. |
| 10.2.6 Mechanical impact | | | Does not apply, since the entire switchgear needs to be evaluated. |

| | | | |
|---|---|---|---|
| 10.2.7 Inscriptions | | | Meets the product standard's requirements. |
| 10.3 Degree of protection of ASSEMBLIES | | | Does not apply, since the entire switchgear needs to be evaluated. |
| 10.4 Clearances and creepage distances | | | Meets the product standard's requirements. |
| 10.5 Protection against electric shock | | | Does not apply, since the entire switchgear needs to be evaluated. |
| 10.6 Incorporation of switching devices and components | | | Does not apply, since the entire switchgear needs to be evaluated. |
| 10.7 Internal electrical circuits and connections | | | Is the panel builder's responsibility. |
| 10.8 Connections for external conductors | | | Is the panel builder's responsibility. |
| 10.9 Insulation properties | | | |
| 10.9.2 Power-frequency electric strength | | | Is the panel builder's responsibility. |
| 10.9.3 Impulse withstand voltage | | | Is the panel builder's responsibility. |
| 10.9.4 Testing of enclosures made of insulating material | | | Is the panel builder's responsibility. |
| 10.10 Temperature rise | | | The panel builder is responsible for the temperature rise calculation. Eaton will provide heat dissipation data for the devices. |
| 10.11 Short-circuit rating | | | Is the panel builder's responsibility. The specifications for the switchgear must be observed. |
| 10.12 Electromagnetic compatibility | | | Is the panel builder's responsibility. The specifications for the switchgear must be observed. |
| 10.13 Mechanical function | | | The device meets the requirements, provided the information in the instruction leaflet (IL) is observed. |

## Technical data ETIM 7.0

| | | |
|---|---|---|
| Low-voltage industrial components (EG000017) / Power circuit-breaker for trafo/generator/installation protection (EC000228) | | |
| Electric engineering, automation, process control engineering / Low-voltage switch technology / Circuit breaker (LV < 1 kV) / Circuit breaker for power transformer, generator and system protection (ecl@ss10.0.1-27-37-04-09 [AJZ716013]) | | |
| Rated permanent current Iu | A | 1 |
| Rated voltage | V | 690 - 690 |
| Rated short-circuit breaking capacity Icu at 400 V, 50 Hz | kA | 150 |
| Overload release current setting | A | 1 - 1 |
| Adjustment range short-term delayed short-circuit release | A | 0 - 0 |
| Adjustment range undelayed short-circuit release | A | 20 - 20 |
| Integrated earth fault protection | | No |
| Type of electrical connection of main circuit | | Screw connection |
| Device construction | | Other |
| Suitable for DIN rail (top hat rail) mounting | | Yes |
| DIN rail (top hat rail) mounting optional | | Yes |
| Number of auxiliary contacts as normally closed contact | | 0 |
| Number of auxiliary contacts as normally open contact | | 0 |
| Number of auxiliary contacts as change-over contact | | 0 |
| With switched-off indicator | | Yes |
| With under voltage release | | No |
| Number of poles | | 3 |
| Position of connection for main current circuit | | Other |
| Type of control element | | Turn button |
| Complete device with protection unit | | Yes |
| Motor drive integrated | | No |
| Motor drive optional | | No |
| Degree of protection (IP) | | IP20 |

## Approvals

| | | |
|---|---|---|
| Specially designed for North America | | No |

## Characteristics

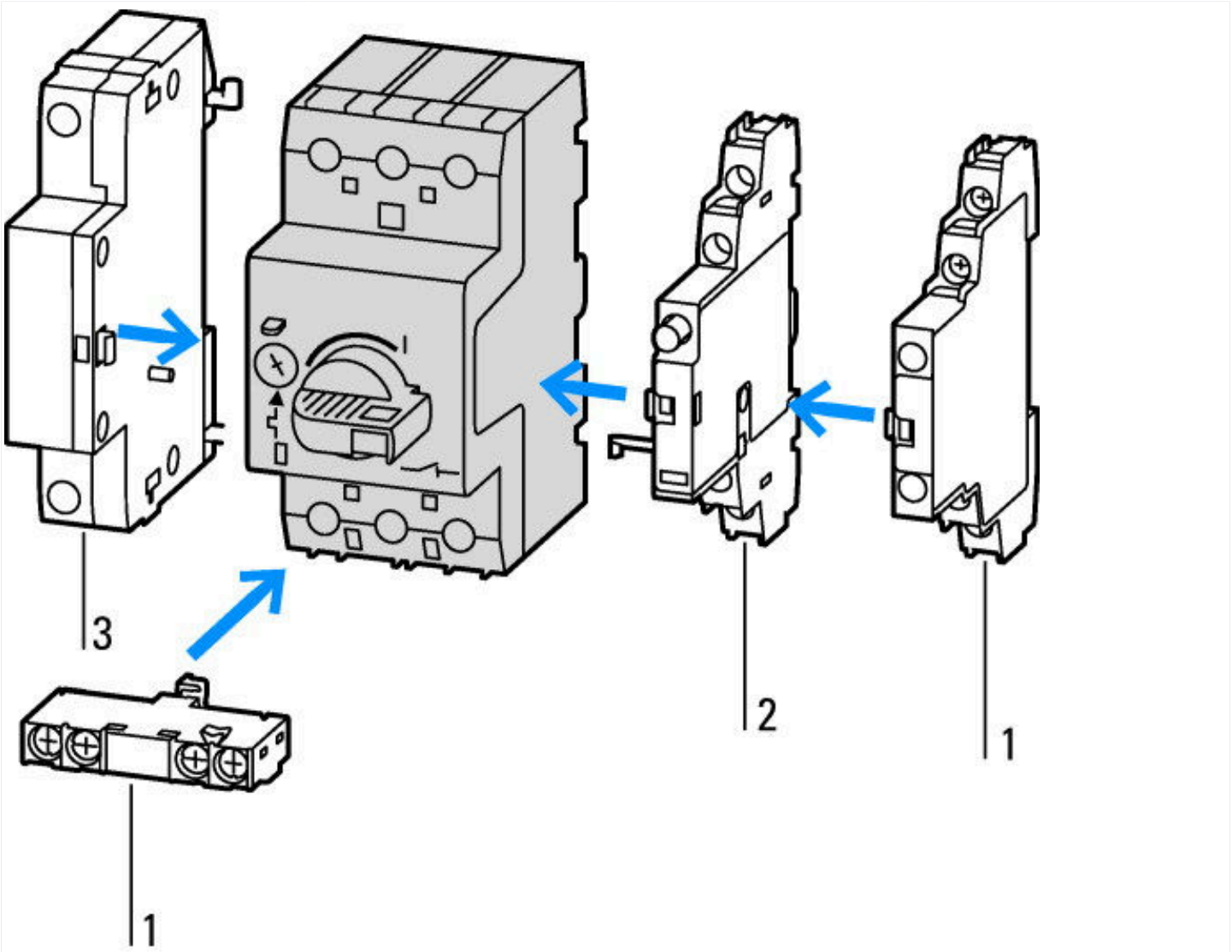


1: Standard auxiliary contact
2: Trip-indicating auxiliary contact
3: Shunt releases, undervoltage releases

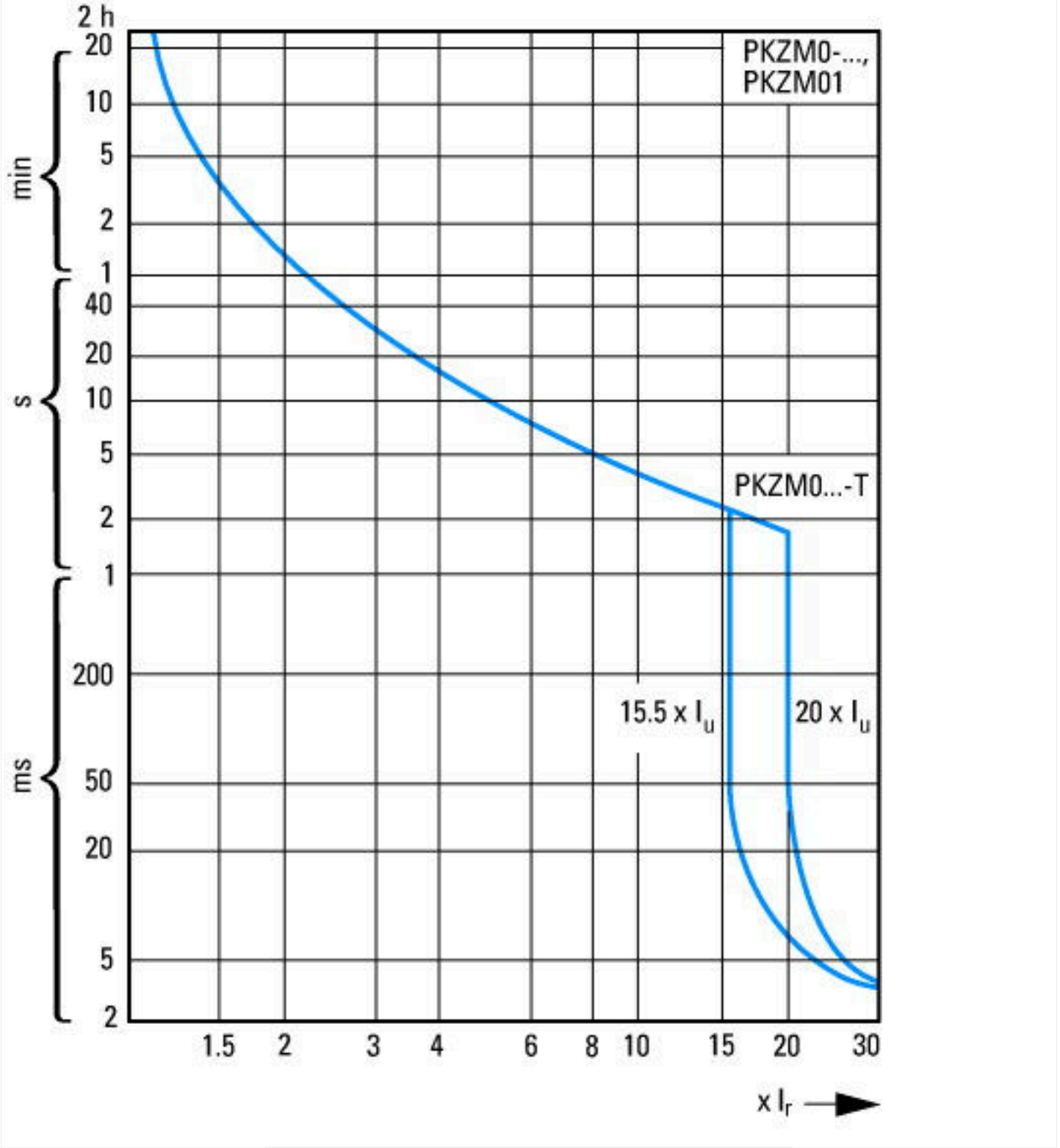


Tripping characteristics motor-protector circuit breaker PKZM0, PKZM0-...T (not for PKM0-...), PKZM01

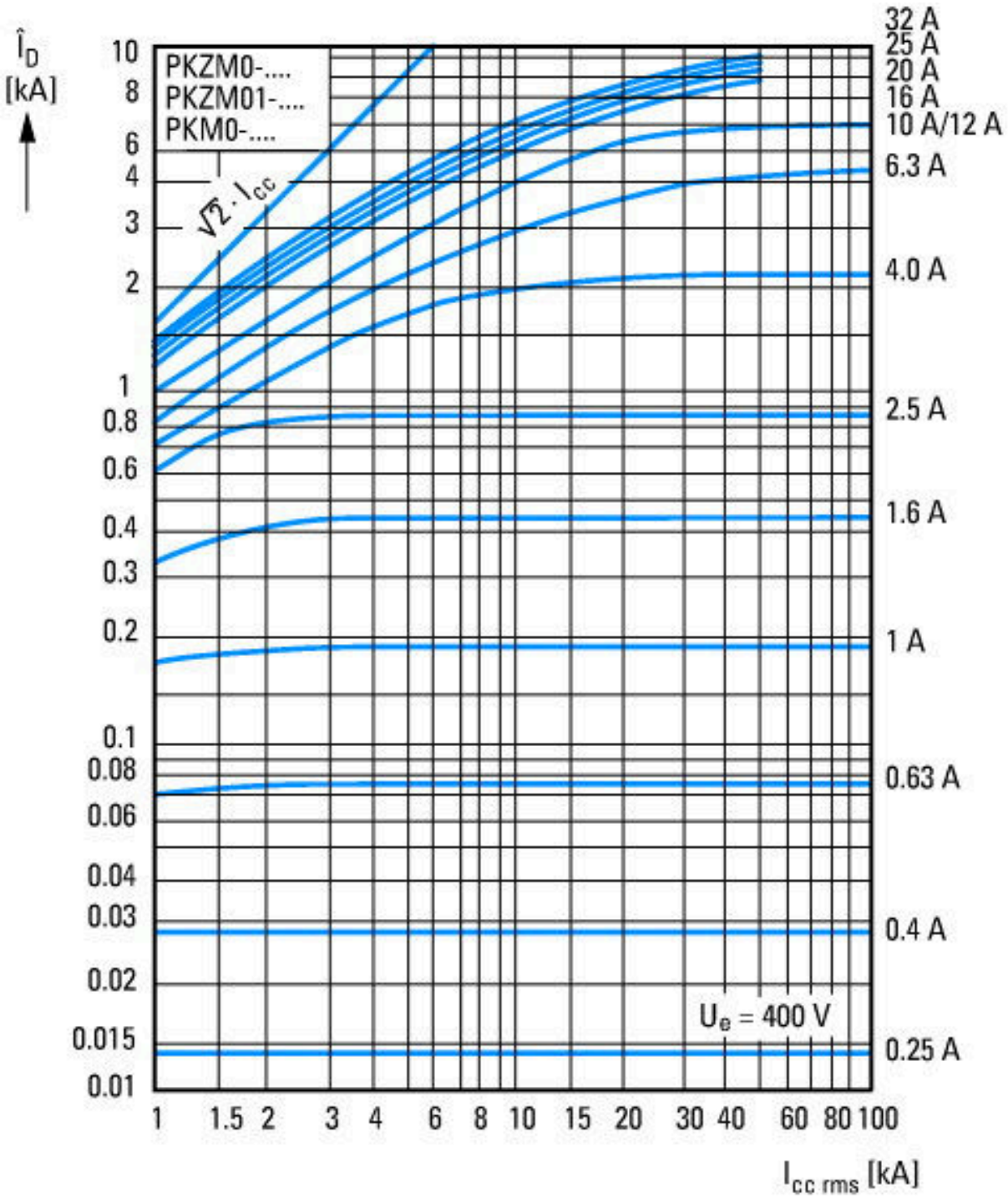


Let-through current

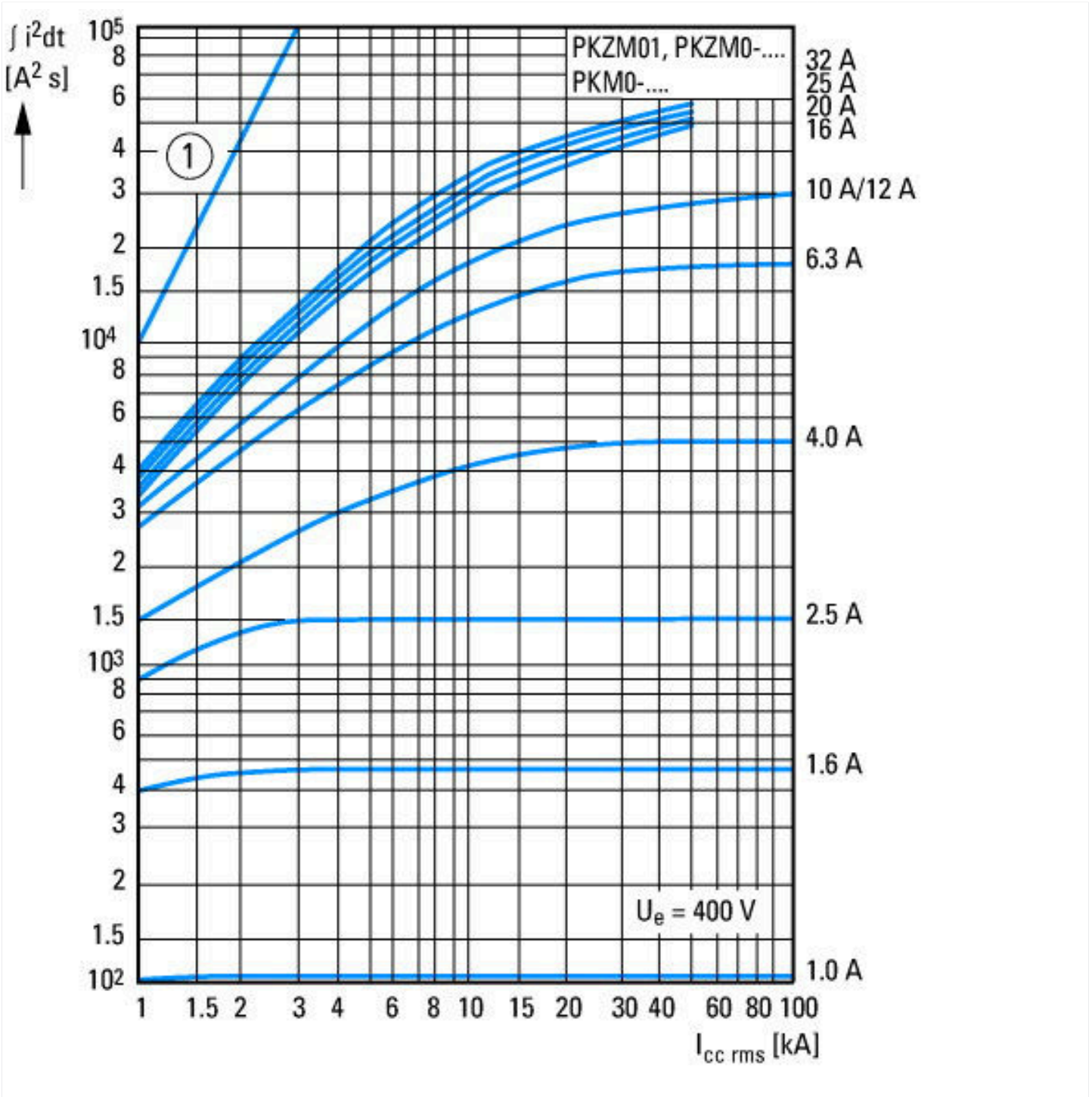


① 1 half-cycle
Let-through energy

## Dimensions

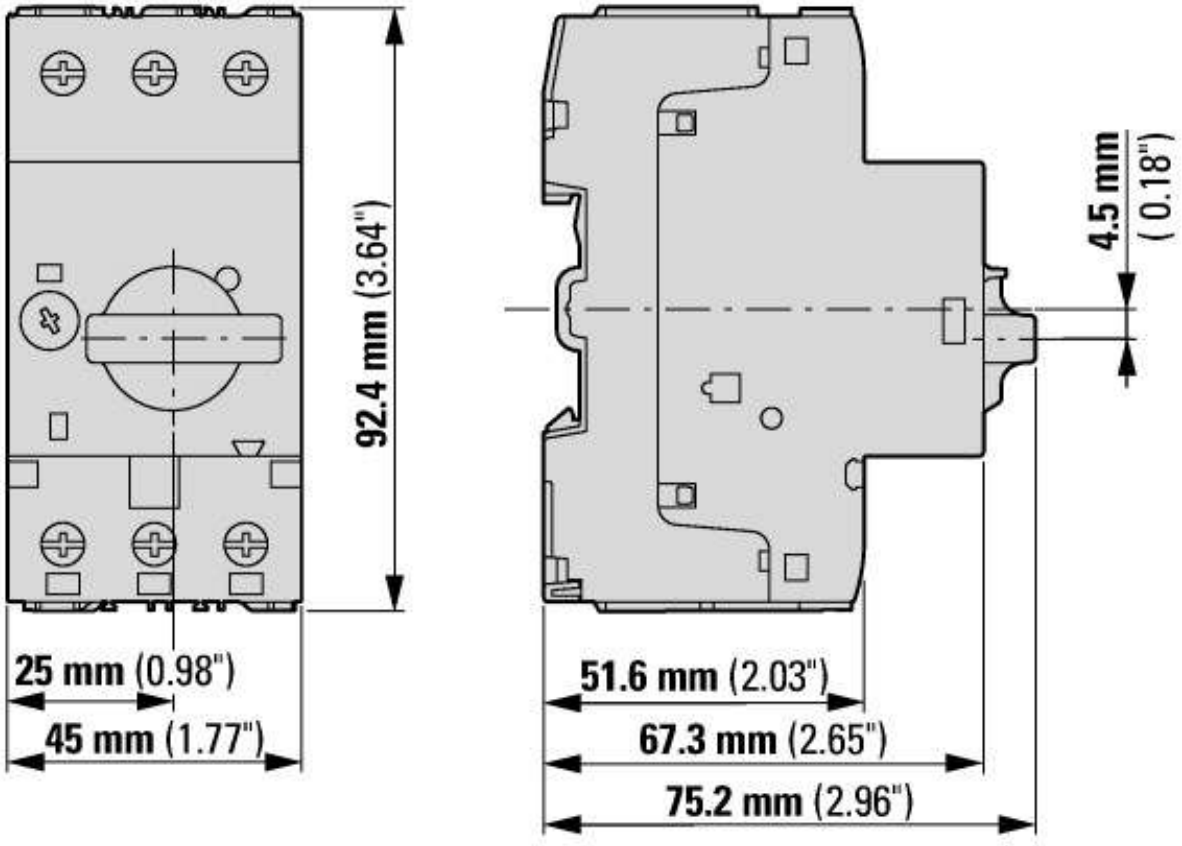


Motor-protective circuit-breaker with standard auxiliary contact
PKZM0-…(+NHI-E-…-PKZ0)
PKZM0-…-T(+NHI-E-…-PKZ0)
PKM0-…(+NHI-E-…-PKZ0)

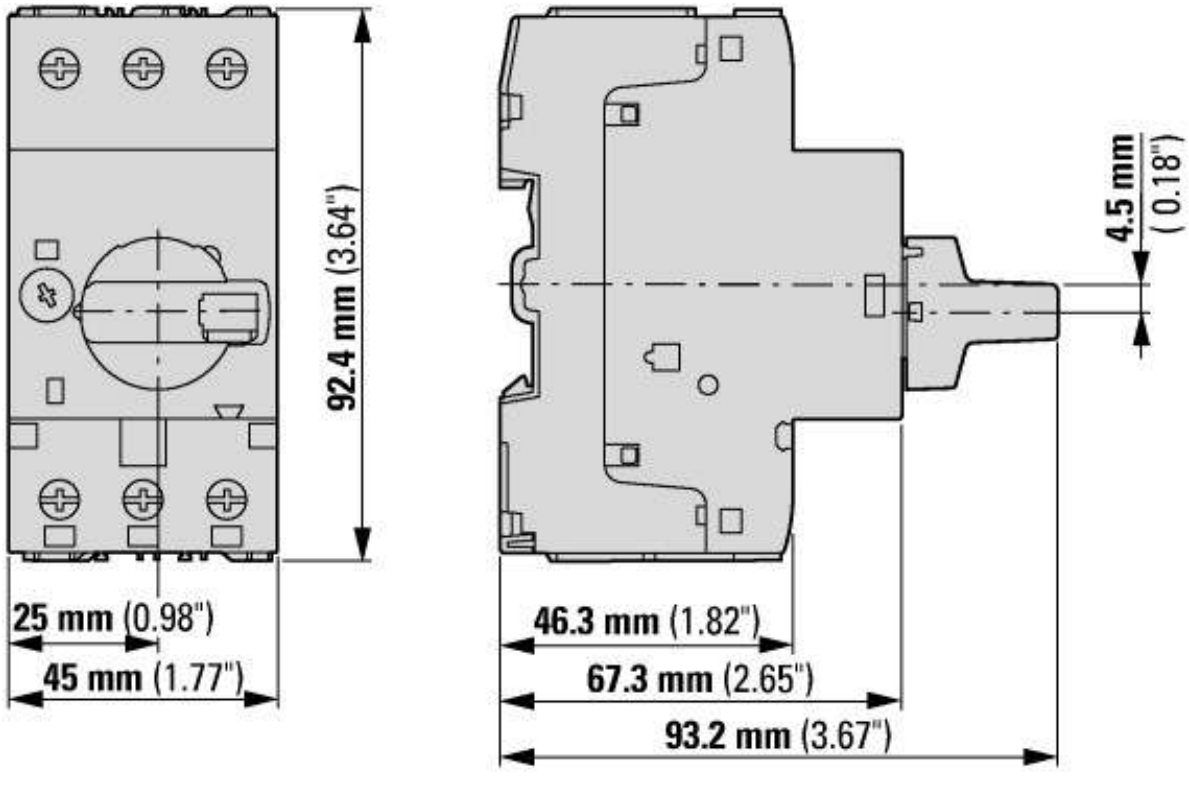


Motor-protective circuit-breakers with lockable rotary handles
PKZM0-…+AK-PKZ0

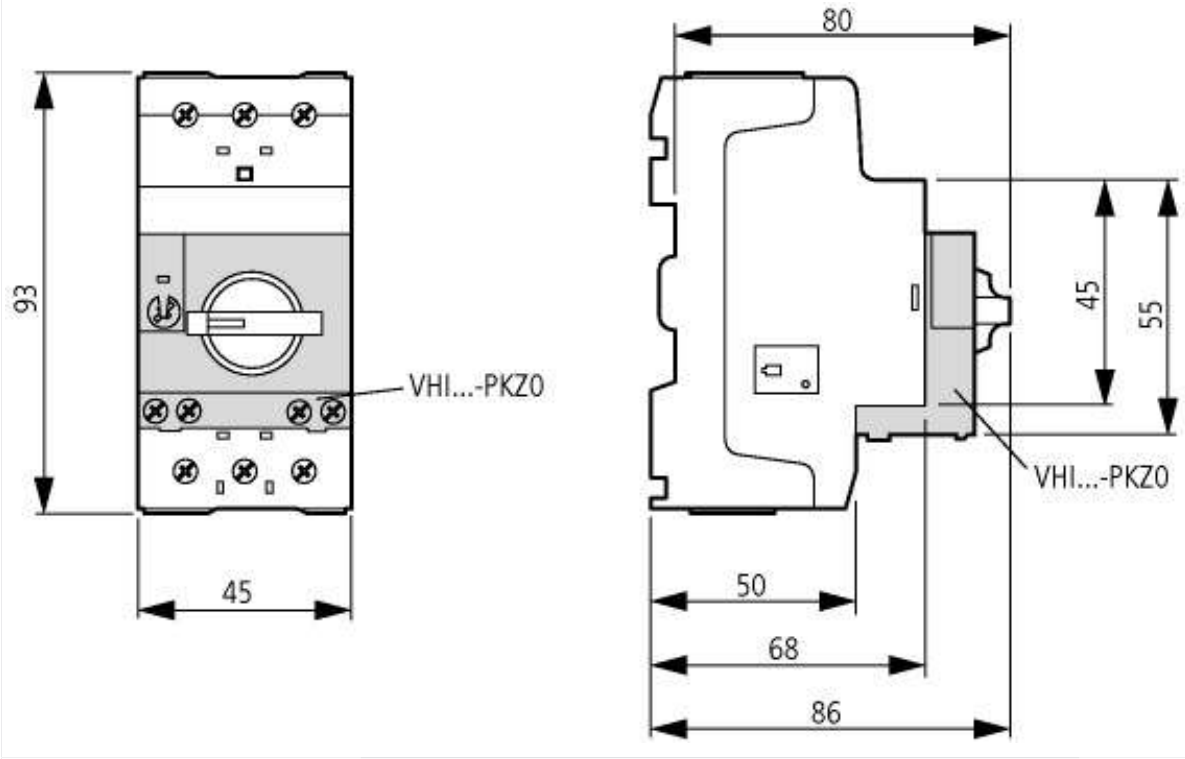


Motor-protective circuit-breakers with early-make auxiliary contacts
PKZM0-…+VHI-…-PKZ0


© 10/2020 by Eaton Industries GmbH