SDA1 - 20 - 25 - 30

DIN Rail 20A, 25A, 30A Solid State Relays



- High load voltage - up to 480VAC
- 4 - 32VDC or 90 - 250VAC Control voltage
- Single phase, zero crossover switching
- LED Control input indicator
- Integrated heatsink
- DIN Rail or chassis mounting

E325835 RoHS Compliant

Output (Load)

Load type		SPST-NO (1 N/O) Resistive
Load current		20A, 25A, 30A
Load switching voltage	AC V_{rms}	40 ~ 480V
Maximum peak voltage	AC V_{pt}	900V
Minimum load current		0.1A
Inrush current (max.)	10ms	20A: 240A / 25A: 300A / 30A: 380A
I^2t	A^2s	20A: 288 / 25A: 450 / 30A: 660
Switch type		Zero crossover (consult factory for Random)

Input (control)

Control voltage	VDC	DC: 4 ~ 32DC / AC: 90 ~ 250AC
Control current	mA	<20
Turn-on voltage (min.)	V_{min}	DC: 3.5VDC / AC: 80VAC
Turn-on voltage (max.)	V_{max}	DC: 35VDC / AC: 280VAC
Turn-off voltage	V	DC: 2VDC / AC: 40VAC

Environmental

Dimensions	L x W x H	100 x 48 x 107mm
Weight	approx.	440g

Note:

All SSR's should be protected by fast acting "semiconductor" fuses.

Circuit breakers and normal fuses are not quick enough to protect the SSR in the event of a current surge or spike"

It is recommended that load power is kept to no more than 70% of the SSR's rating to avoid unexpected issues in the event of variations in the load and ambient temperature" These SSR's are designed to be used with a suitable heat sink.

Transfer Pads and Heatsinks for Durakool SSR relays can be found in Durakool's Solid State Relay (SSR) catalogue.

Ordering Code

S D A 1 Z - 2 5 K - A

Series

Switching

Z: Zero Crossover

Load current

20: 20A

25: 25A

30: 30A

Load voltage

K: 40 to 480VAC

Control voltage input

A: 90 ~ 250VAC

D: 4 ~ 32VDC

Schematic — Fig. 1

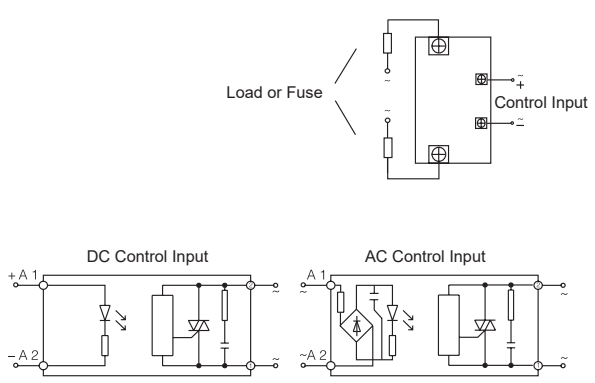

Dimensions mm — Fig. 2

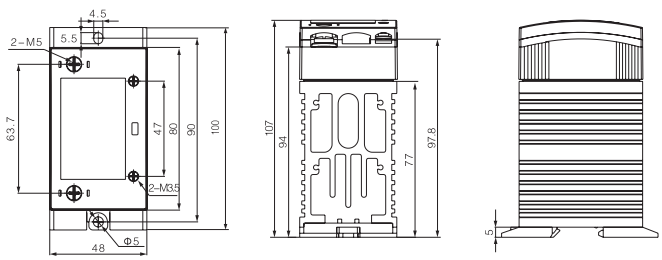

Specifications are subject to change without notice. E&OE.