00150703.plt
Not to Scale

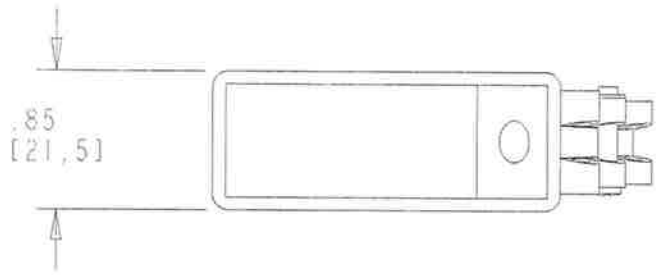

NOTES:
1. MATERIAL: PVC
2. COLOR: BLACK

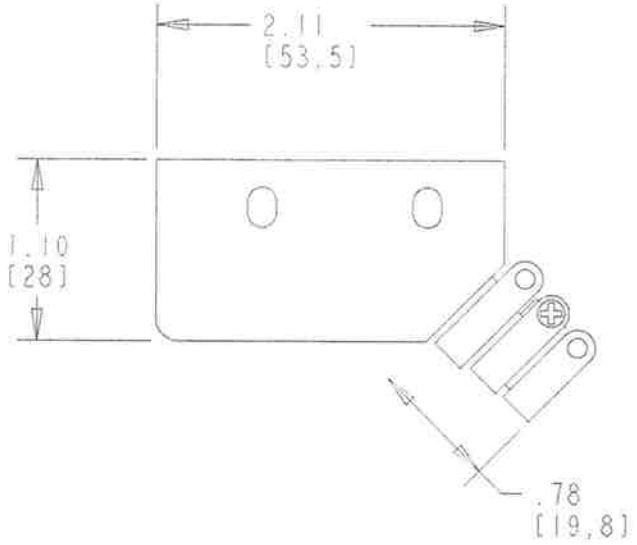

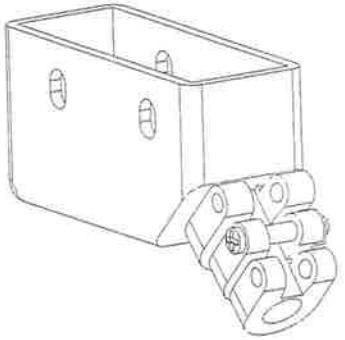

A	11578	30-Jun-04	JED	SG
REV	ECN NO.	DATE	PREP	APVD

DWN: J. DOLNIK
APVD: SG
DATE: 30-Jun-04

THIRD ANGLE PROJECTION

THE CONFIDENTIAL AND PROPRIETARY INFORMATION CONTAINED IN THIS DOCUMENT IS OWNED BY CHERRY ELECTRICAL PRODUCTS, A DIVISION OF THE CHERRY CORPORATION WHO MUST GIVE WRITTEN PERMISSION BEFORE THE DOCUMENT OR INFORMATION CAN BE COPIED, DISCLOSED OR USED IN ANY WAY

TOLERANCE UNLESS SPECIFIED

	X.XX	X.XXX	ANGLES
	± 0.01	± 0.005	± 1.0°

PROJECT / ESR 04-0039

CHERRY ELECTRICAL PRODUCTS

3600 SUNSET AVENUE
WAUKEGAN, IL 60087

NAME / DESCRIPTION
TERMINAL COVER

A ITEM NO. 00150703

SCALE: 1:1 SH 1 OF 1

ORIGINAL ON PRO/E