EVT293

Connection cable

VDOAF032VAS00,3E03STGH030VAS

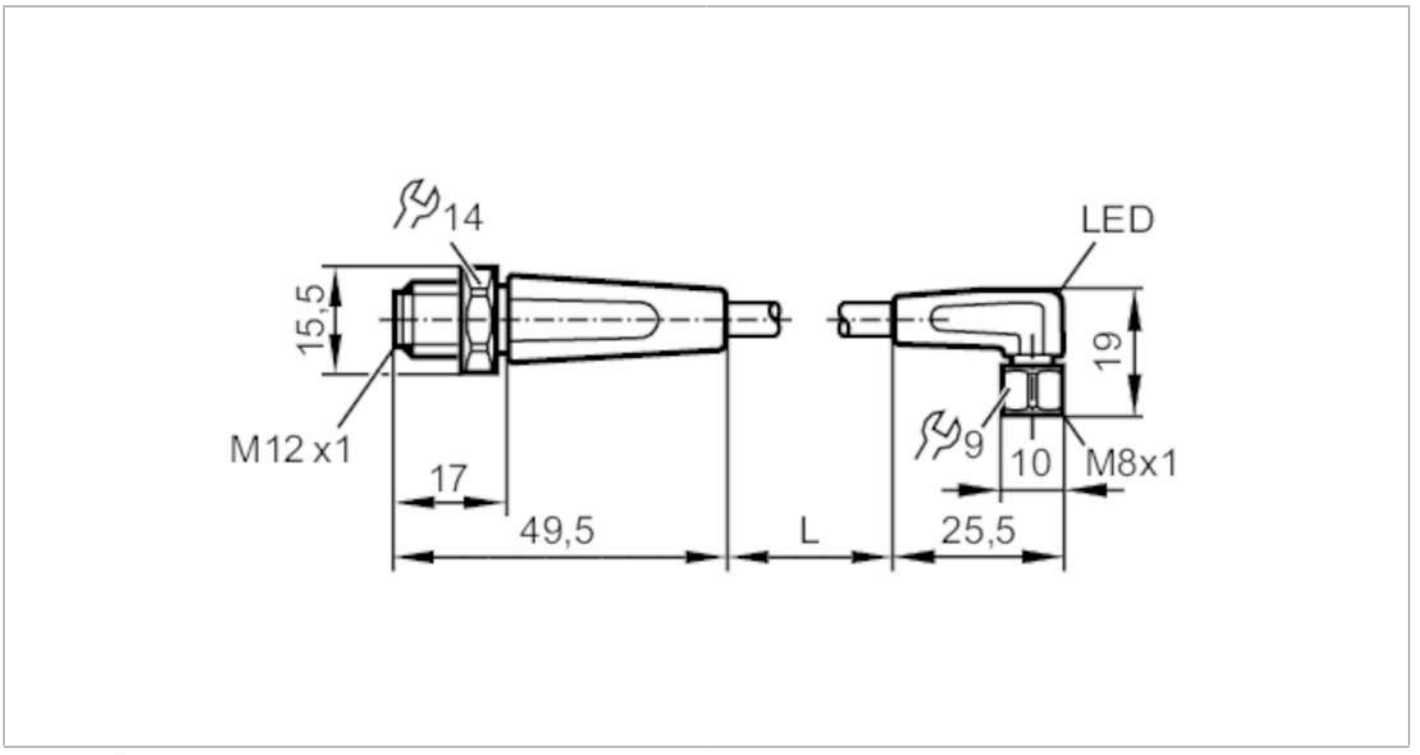

Application		
Special feature		Free from silicone; Gold-plated contacts; Drag chain suitability
Application		hygienic and wet areas in the food industry
Free from silicone		yes
Electrical data		
Operating voltage	[V]	10...36 DC
Protection class		III
Max. current load total	[A]	3
Outputs		
Electrical design		PNP
Operating conditions		
Ambient temperature	[°C]	-25...80
Note on ambient temperature		cULus: ...50 °C
Ambient temperature (moving)	[°C]	5...80
Note on ambient temperature (moving)		cULus: ...50 °C
Protection		IP 65; IP 67; IP 68; IP 69K
Mechanical data		
Weight	[g]	34.3
Dimensions	[mm]	15.5 x 15.5 x 49.5
Materials		housing: PVC orange; Sealing: EPDM
Material nut		stainless steel (1.4404 / 316L)
Drag chain suitability		yes

EVT293

Connection cable

VDOAF032VAS00,3E03STGH030VAS

Drag chain suitability	bending radius for flexible use	min. 10 x cable diameter
	travel speed	max. 3.3 m/s for a horizontal travel length of 5 m and max. acceleration of 5 m/s²
	bending cycles	> 1 Mio.
	torsional strain	± 180 °/m

Displays / operating elements

Display	switching status	1 x LED, yellow
	operation	1 x LED, green

Remarks

Pack quantity	1 pcs.

Electrical connection - plug

Connector: 1 x M12, straight; coding: A; Locking: stainless steel (1.4404 / 316L); Contacts: gold-plated; Tightening torque: 0.6...1.5 Nm

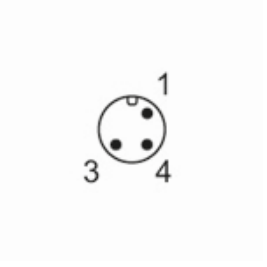

Electrical connection

Cable: 0.3 m, PVC, orange, Ø 4.9 mm; 3 x 0.34 mm² (42 x Ø 0.1 mm)

Connection

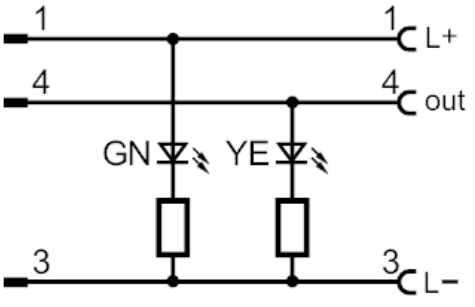

Electrical connection - socket

Connector: 1 x M8, angled; coding: A; Locking: stainless steel (1.4404 / 316L); Contacts: gold-plated; Tightening torque: 0.3...0.5 Nm

