E21308

Bezel for cooling box for distance sensors

FRONT SCREEN COOLING BOX O1D

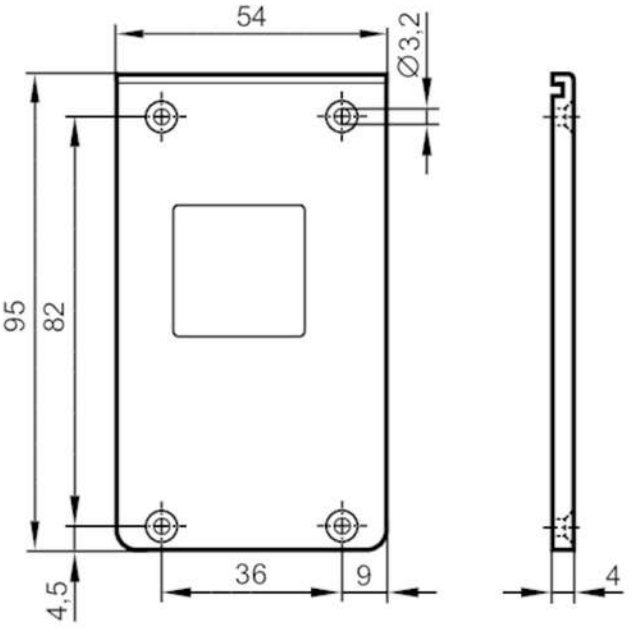

Application		
Design		front frame for the protective housing with an active cooling system for sensors of the types O1D
Pressure rating	[bar]	10
Operating conditions		
Ambient temperature	[°C]	-10...180
Mechanical data		
Weight	[g]	59.4
Installation instruction		countersunk screws have to be secured with Loctite ® adhesive 243 and tightened with 150 Ncm
Dimensions	[mm]	95 x 54 x 4
Materials		bezel: aluminium black anodised; front pane: float glass
Accessories		
Items supplied		countersunk screws: 4 x M3 x 8, stainless steel
Remarks		
Pack quantity		1 pcs.