Positioning element
for inductive encoders Ri-QR24
P2-Ri-QR24

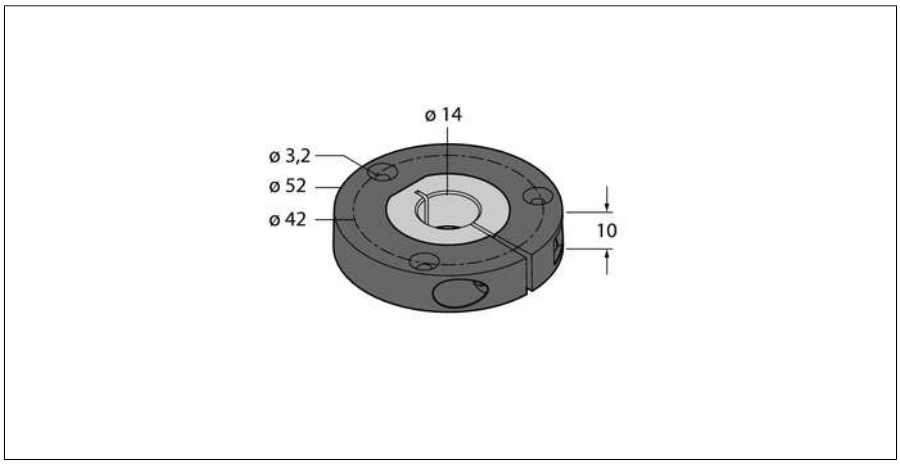

- **Positioning element, for Ø 14 mm shafts**

Type code	P2-Ri-QR24
Ident no.	1590922

Edition • 2014-06-17T08:40:58+02:00

Hans Turck GmbH & Co.KG ● D-45472 Mülheim an der Ruhr ● Witzlebenstraße 7 ● Tel. 0208 4952-0 ● Fax 0208 4952-264 ● more@turck.com ● www.turck.com