INSTALLATION GUIDE

HVC-PD Depot E-Bus Charger

Installation Guide for EU products

Version 1.3



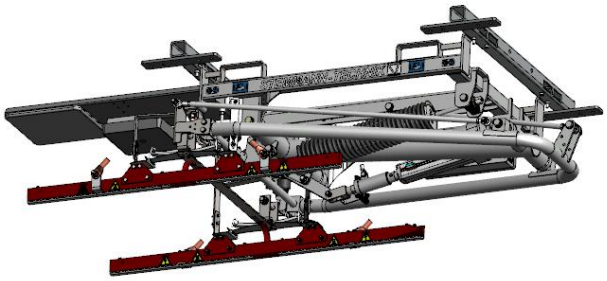



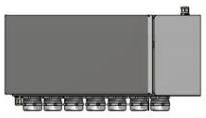

Notice

This document contains information about one or more ABB products and may include a description of or a reference to one or more standards that may be generally relevant to the ABB products. The presence of any such description of a standard or reference to a standard is not a representation that all of the ABB products referenced in this document support all of the features of the described or referenced standard. In order to determine the specific features supported by a particular ABB product, the reader should consult the product specifications for the particular ABB product.

ABB may have one or more patents or pending patent applications protecting the intellectual property in the ABB products described in this document.

The information in this document is subject to change without notice and should not be construed as a commitment by ABB. ABB assumes no responsibility for any errors that may appear in this document.
In no event shall ABB be liable for direct, indirect, special, incidental or consequential damages of any nature or kind arising from the use of this document, nor shall ABB be liable for incidental or consequential damages arising from use of any software or hardware described in this document.
This document is originally written in English. Other language versions are a translation of the original document and ABB cannot be held liable for errors in the translation.
This document and parts thereof must not be reproduced or copied without written permission from ABB, and the contents there of must not be imparted to a third party nor used for any unauthorized purpose.

Copyrights

All rights to copyrights, registered trademarks, and trademarks reside with their respective owners.
Copyright © 2020 ABB.
All rights reserved.

Version control

Version	Date	Remarks
0.1	07-06-2019	Released for review.
1.0	26-08-2019	Commercial release.
1.1	07-07-2020	Add description to connect DC- OVP Sensing wire in ACM. Changes made according to Mantis issue 12192. Distance sensor is removed form Charge Pole.
1.2	23-08-2021	Introduced new nomenclatures
1.3	14-06-2022	Introduced notice for WiFi cable routing paragraph 5.13.6 and 5.17.7

Table of Contents

1. Introduction 9

1.1. Preface 9
1.2. Intended document users 9
1.3. Signs 9
1.4. Safety regulations 10
1.4.1. Owner responsibilities 10
1.4.2. Tilting and handling 11
1.4.3. Electric hazards 12
1.4.4. Installation safety 12
1.5. Environment and disposal of waste 13
1.6. Cyber Security Disclaimer 13
1.7. Contact information 14

2. Description of the product 15

2.1. Overview of the system 15
2.1.1. Standard HVC-PD 150 kW E-Bus Charger system 15
2.1.2. Standard HVC-PD 300 kW E-Bus Charger system 15
2.1.3. Standard HVC-PD 450 kW E-Bus Charger system 16
2.1.4. Power Cabinet 16
2.1.5. ACS Control Module 17
2.1.6. Junction Box 18
2.1.7. Pantograph 19
2.2. Accessories 19
2.2.1. Foundation for Power Cabinet 19
2.2.2. Pantograph mounting brackets 20
2.2.3. Wall-mounting brackets for safe wall fixing 20
2.2.4. Communication glass fiber cable 21
2.2.5. Emergency unit 21
2.2.6. Charger state indicator light (beacon) 22
2.2.7. WiFi antenna 23
2.2.8. RFID unit 23

3. Preparation 25

3.1. Project planning 25
3.2. Grid connection 26
3.3. Internet access 26
3.4. Location 26
3.5. Geometry of infrastructure 27
3.5.1. Required space for the Power Cabinet 27
3.5.2. Placement of multiple cabinets 28
3.5.3. Required space for the ACS Control Module/Junction Box 29
3.6. Pantograph position in relation to the bus 30
3.6.1. Pantograph position in relation to the drive direction of the bus 30
3.6.2. Pivoting of the collector head around the pantograph axis (Z-axis) 30
3.6.3. Maximum allowed slope of the pantograph in Z-axis 31
3.6.4. Pantograph position in X-axis (height relative to TOR) 31
3.6.5. Pantograph position in Y-axis in relation with the bus 32
3.6.6. Maximum slope of the road in X-axis 35
3.7. WiFi antenna position in relation to the bus 36
3.8. Electrical engineering 37
3.8.1. Electrical installation 37
3.9. Civil installation 38

3.10. Lightning protection 39

4. Construction 40

4.1. Construct foundation of the Power Cabinet 40
4.1.1. Options 40
4.1.2. Workflow with concrete foundation 41
4.1.3. Workflow with metal frame foundation 43
4.1.4. Workflow mounting Power Cabinet direct on a floor (footprint) 44
4.2. Mounting preparation of the ACS Control Module 45
4.2.1. Options 45
4.2.2. Workflow for wall mounting 45
4.3. Mounting preparation of the Junction Box 46
4.3.1. Options 46
4.3.2. Workflow for wall mounting 46
4.4. Cabling 47
4.4.1. Charge system configurations 47
4.4.2. AC power cable 49
4.4.3. Cables between the Power Cabinets and the ACS Control Module 49
4.4.4. Cables between the Power Cabinets 49
4.4.5. Cables between the ACS Control Module and the Pantograph 49
4.4.6. Cables between the ACS Control Module and other components 50
4.4.7. Grounding of the Charge system 50
4.4.8. Cable specification list 51
4.5. Internet connection 53

5. Placement and Connection 54

5.1. About placement and connection 54
5.2. Route the cables 54
5.3. Unpack Power Cabinet 55
5.3.1. Before unpacking 55
5.3.2. Remove packaging 56
5.4. Move Power Cabinet to position 56
5.4.1. Move cabinet with a hoist 57
5.4.2. Move cabinet with a forklift truck 58
5.5. Install Power Cabinet onto the foundation 59
5.5.1. Connect Power Cabinet to foundation 59
5.5.2. Open the door of the Power Cabinet 61
5.5.3. Move the sliding plate of the guidance plates of the cabinet 62
5.5.4. Route cables through guidance plates 62
5.5.5. Move sliding plates of the guidance plates of the cabinet 63
5.5.6. Install border covers of the Power Cabinet 64
5.5.7. Install border covers of metal frame foundation 64
5.5.8. Install front cover plate on foundation 65
5.6. Connect AC power cable and PE wires Power Cabinets 66
5.6.1. Remove the protection covers 66
5.6.2. Connect the PE wire of the AC power cable 67
5.6.3. Connect the AC power cable 68
5.6.4. Install the protection covers 69
5.6.5. Install lightning protection (optional) 70
5.6.6. Connect the PE wire to the Charge Pole 71
5.6.7. Connect the PE wire between the Power Cabinets 72
5.7. Connect the DC power cables Power Cabinets 72
5.7.1. Remove the protection cover 73
5.7.2. Connect the DC power cables 73
5.7.3. Install the protection cover 74

5.8. Connect AC utility power, Interlock and CAN cables Power Cabinet 74
5.8.1. Route the cables to the terminal blocks 74
5.8.2. Connect the AC utility power cable 75
5.8.3. Connect the Interlock cable for the HVC 150 kW system 76
5.8.4. Upgrade the Interlock connection to the HVC 300 kW system 77
5.8.5. Upgrade the Interlock connection to the HVC 450 kW system 79
5.8.6. Connect the CAN cable 81
5.9. Connect the communication cable Power Cabinet 84
5.9.1. Route the cable to the terminal blocks 84
5.9.2. Connect the communication fiber cables 84
5.10. Close the door of the Power Cabinet 85
5.11. Installation of the Pantograph 86
5.11.1. Before unpacking 86
5.11.2. Move the Pantograph to position 86
5.11.3. Mounting the Pantograph 88
5.11.4. Using the ABB Pantograph mounting brackets 89
5.12. Mounting the WiFi antenna and RFID unit (optional) 91
5.13. Connect cables to Pantograph 92
5.13.1. Connect the PE wire to the Pantograph frame 93
5.13.2. Connect the ACS PE and CP/PE wire to the Pantograph 94
5.13.3. Connect DC cables to Pantograph 96
5.13.4. Connect ACS control cable to Pantograph 97
5.13.5. Connect ACS heater cable to Pantograph 98
5.13.6. Connect the WiFi cable to the WiFi antenna 99
5.13.7. Connect the RFID cables to the RFID unit (optional) 100
5.14. Unpack the ACS Control Module/Junction Box 100
5.14.1. Before unpacking 100
5.14.2. Remove packaging 100
5.15. Install ACS Control Module and Junction Box onto wall 101
5.15.1. Using the wall-mounting brackets (only for ACM) 102
5.15.2. Direct wall mounting 103
5.16. Connect PE wires to central PE-rail 104
5.16.1. Connect the PE wire of the ACS PE 104
5.16.2. Connect the PE wire from the Pantograph frame 105
5.16.3. Connect the PE wire from the ACS Control Module 105
5.16.4. Connect the PE wire from the Junction Box 106
5.16.5. Connect the PE wire of the Power Cabinet 106
5.16.6. Install lighting protection (optional) 107
5.17. Connect cables to ACS Control Module 107
5.17.1. Gland layout of the ACS Control Module 107
5.17.2. Connect the DC+ power in- and output cables 109
5.17.3. Connect the DC- power in- and output cables in Junction Box 111
5.17.4. Connect the DC- OVP Sensing wire from Junction Box 113
5.17.5. Connect the AC utility power cable from Power Cabinet 113
5.17.6. Connect the communication cable from the Power Cabinet 114
5.17.7. Connect the WiFi cable 115
5.17.8. Connect the RFID cables 116
5.17.9. Connect the other cables to the ACS Control Module 117
5.18. Close the door of the ACS Control Module 119
5.19. Mounting the emergency unit 119
5.20. Mounting the beacon 120

6. Commissioning 121

6.1. Commissioning preparation 121
6.2. Customer Acceptance Form (CAF) 122

7. Service and Maintenance 123

7.1. About Service and Maintenance 123
7.2. Cleaning of the cabinet 123

8. Technical Specification 125

8.1. Electrical specification complete 150 kW system 125
8.2. Electrical specification complete 300 kW system 125
8.3. Electrical specification complete 450 kW system 126
8.4. Mechanical data 126
8.5. Environment 127
8.6. Certifications 127

9. Appendix 128

A Dimensions Power Cabinet 129
B Dimensions ACS Control Module 131
C Dimensions Junction Box 132
D Dimensions Pantograph 133
E Dimensions 134
F Dimensions Metal Foundation Power Cabinet 138
G Power Cabinet – Outline with Foundation 139
H Signal connection diagram 140
I Ground overview of the system 143
J WEEE disposal – 2012-19/EU 144

Glossary

AC
Alternating Current.

ACM
ACS Control Module

ACS
Automatic Control System. In this charger system the pantograph.

CAF
Customer Acceptance Form.

Contractor
Entity hired by the owner / site operator to do engineering, civil and electrical installation work.

DC
Direct Current.

Grid provider
Company responsible for the transportation and distribution of electricity.

HMI
Human Machine Interface; the screen on the charger.

HVC
Heavy Vehicle Charger.

Power Cabinet
Intermediate unit that provides 150 kW of DC power to the Charge control set. Gets its power from a power distribution board.

Interlock
The Interlock is an isolated current loop and is a feature that makes the state of two mechanisms or functions mutually dependent.

LAN
A computer network that interconnects computers systems within a limited area.

NOC
ABB Network Operating Centre; remotely checks the correct functioning of the charger.

OPP Charge
Is a trade name of fast charging method for electric vehicles.

Owner
The legal owner of the charger.

Pantograph
The mechanical contact linkage of the charger through which the DC charge power is electrical transported to the electrical vehicle.

PD
Panto Down. A charge system where the pantograph is mounted external from the vehicle.

PE
Protective Earth.

PPE
Personal Protective Equipment. Equipment such as safety shoes, helmet, glasses, gloves.

RCD
Residual-Current Device.

RFID
Radio-Frequency IDentification. RFID is a communication technology by means of radio waves to transfer data over a very short distance between a reader and an electronic tag or card.

Site operator
The entity is responsible for the day to day control of the charger. The site operator can be the owner, but not necessarily.

TOR
Top of Road

User
The owner of an electric vehicle, who uses the Charge Station to charge that vehicle.

WiFi
A technology that allows electronic devices to connect to a wireless LAN (WLAN) network.

1. Introduction

1.1. Preface

This guide describes the physical installation of the HVC-PD Depot E-Bus Charger at its location.

The HVC-PD Depot E-Bus Charger is a DC fast charger system for hybrid or electrical buses that can be used within bus depots which is based on the CCS Charging standard. It is not permitted to use the HVC-PD Depot E-Bus Charger to charge any other equipment, or to use the HVC-PD Depot E-Bus Charger for any other purposes.
The HVC-PD Depot E-Bus Charger uses high-amperage electric currents. Therefore the installation must be planned carefully, and must be done by certified personnel only (according to local standards[1]).

Before installing the HVC-PD Depot E-Bus Charger, read this Installation Guide carefully and attentively. Follow the instructions in this Installation Guide. ABB is not responsible for any damage that has been caused by not or incorrectly following and executing the instruction described in this manual.

1.2. Intended document users

This document is intended to be used by:

- Customers who purchased a HVC-PD Depot E-Bus Charger, or are in the process of ordering and want to know in more detail how it has to be installed.
- Contractors who are responsible for site preparation and/or installation of the HVC-PD Depot E-Bus Charger.

1.3. Signs

The following signs are used on the equipment and in this manual:

	**DANGER** **Hazardous voltage** Identifies a hazard that could result in severe injury or death through electrocution.
	**WARNING** **Various** Identifies a hazard that could result in severe injury or death.
	**WARNING** **Rotating parts** Identifies a hazard that could result in injury due to the presence of rotating or moving parts.

[1] Local regulations shall take precedence if they list different installation requirements than prescribed in this Installation Manual.

	**WARNING** **Pinch Hazard** Identifies a hazard that could result in injuries in which some body parts are pinched or crushed.
	**WARNING** **Fall Hazard** Identifies a hazard that could result in injury due unsafe work at height.
	**CAUTION** **Various** Identifies a hazard that could result in damage to the machine, other equipment, and/or environmental pollution.
	**CAUTION** **Environmental damage** Identifies a special indications as well as biddings and prohibitions to avoid damages in the environment. This sign refer to present national regulation according the environment.
	**NOTICE** Contains remarks, suggestions or advice.

1.4. Safety regulations

1.4.1. Owner responsibilities

The owner and site operator are required:

- To operate the charge system with the protective devices installed and to make sure all protective devices are correctly installed after carrying out installation or maintenance.
- To write an emergency plan that instructs people what to do in case of emergency.
- To prepare the site where the charge system will be installed, according to the requirements described in this guide.
- To make sure that there is enough space around the charger to carry out maintenance work.
- To appoint a person responsible for the safe operation of the charge system and for the coordination of all work.
- All works have to be carried out from qualified personnel. All qualified personnel has to estimate their transmitted works, identify and avoid. They must have experience and enough knowledge over: safety regulations and labor medical regulations, accident prevention regulations, guideline and approved safety regulations, and special instruction concerning occurrence of danger (especially remaining risk) possible dangers.

- You are not allowed to modify the charge system without the permission of ABB. The owner is cautioned that changes or modifications not expressly approved by ABB could void the owner's authority to operate the equipment and ABB's warranty policy.
- Neither ABB nor its affiliates shall be liable to the purchaser of this product or third parties for damages, losses, costs or expenses incurred by purchaser or third parties as a result of: an accident, misuse or abuse of this product or unauthorized modifications, repairs or alterations to this product, or failure to strictly comply ABB operating and maintenance instructions.

1.4.2. Tilting and handling

	**CAUTION** Heavy equipment Handling instructions: 1. Use crane or forklift truck when lifting or moving the Power Cabinet and or Pantograph. 2. Do not drop parts of the HVC-PD E-Bus Charger. 3. Do not exceed a tilting of 30º for the Power Cabinet. 4. Read and follow the ABB *Guidance on the requirements for safe operation of mobile cranes* (ML-03, 9Akk104941D0113).
	**WARNING** **Personal safety (PPE)** Always wear a safety helmet, safety gloves and safety shoes when you do the lifting and tilting work.
	**WARNING** Make sure that personnel cannot be crushed or become trapped during lifting and tilting work.

Lifting activities

It is a legal requirement that all activities involving lifting equipment are planned and that they are conducted under effective supervision and managed based on the risk, complexity of the activity and the work environment (EU directive 2009/104/EEG, appendix II, chapter 3.2.5).

It is of great importance, regardless of location, that any lifting activity is performed safely, because the activity:

- Carry out within the framework of an effective management system;
- Properly planned;
- Risk has been assessed;
- Supervision is being held; and
- Performed by skilled personnel and with the appropriate means.

All lifting activities must be performed under the ABB *Guidance on the requirements for safe operation of mobile cranes* (ML-03, 9Akk104941D0113).
When applying this Standard, local laws and regulations must be taken into account at all times. In the event of conflicts, local laws and regulations prevail over this Standard.

1.4.3. Electric hazards

	**DANGER** **Hazardous voltage** The HVC-PD E-Bus Charger conductors under hazardous electrical voltages. The grid terminals on the internal DIN rail may carry hazardous voltages, even if all circuit breakers are switched off.

1.4.4. Installation safety

	**WARNING** **Personal safety (PPE)** Always wear a safety helmet, safety gloves and safety shoes when you do the lifting and tilting work.
	**WARNING** Visually examine the package for damage. See section *Before unpacking* on Page 55 and section *Before unpacking* on Page 100. If there is damage, do not install the system.
	**DANGER** **Hazardous voltage** Instructions: 1. Always switch off the external group switch and the main switch in the cabinet, before performing any installation, disassembly, repair or replacement of components. 2. Do a voltage check and make sure that the electrical power is disconnected from the system. 3. Only ABB certified technicians are permitted to commission the HVC-PD E-Bus Charger. 4. When the system is in an open or dangerous condition, do not allow unqualified persons to go near it. Instruct and warn people about the potential harmful high voltages. 5. The installation and maintenance personnel must supply their own lighting equipment, since the HVC-PD E-Bus Charger has no lights inside the cabinet. 6. Always connect the Protective Earth (PE) first, before connecting the neutral (N) and Phase (P) wiring. 7. Correctly lock the door after installation or service operations.
	**WARNING** Make sure that there is a minimum free space of 1000 mm in front of the door of the Power Cabinet. The minimum space is necessary to allow service personnel to quickly move away from the Power Cabinet if there is an emergency when the door is open.

	**WARNING** Make sure that there is a minimum free space of 1000 mm in front of the door of the ACS Control Module. The minimum space is necessary to allow service personnel to quickly move away from the Depot Charge Box if there is an emergency when the door is open.
	**CAUTION** **Warranty** Installation and commissioning work must be carried out by certified personnel. The warranty will be void if any work carried out by non-certified personnel.

1.5. Environment and disposal of waste

	**CAUTION** Always observe the local rules and regulations with respect to processing (non-reusable) parts of the HVC-PD E-Bus Charger.

1.6. Cyber Security Disclaimer

This product is designed to be connected to and to communicate information and data via a network interface. It is customer's sole responsibility to provide and continuously ensure a secure connection between the product and customer network or any other network (as the case may be). Customer shall establish and maintain any appropriate measures (such as but not limited to the installation of firewalls, application of authentication measures, encryption of data, installation of anti-virus programs, etc) to protect the product, the network, its system and the interface against any kind of security breaches, unauthorized access, interference, intrusion, leakage and/or theft of data or information.
ABB Ltd and its affiliates are not liable for damages and/or losses related to such security breaches, any unauthorized access, interference, intrusion, leakage and/or theft of data or information.

1.7. Contact information

ABB in your country
Please contact ABB in your country for delivery and service information.

ABB EV Infrastructure global
ABB EV Infrastructure

Address Heertjeslaan 6
2629 JG Delft
The Netherlands

Telephone +31 88 440 46 00

Mail info.evi@nl.abb.com

Write down here your local ABB contact details:

2. Description of the product

2.1. Overview of the system



Example of a complete installation

A Low voltage power distribution cabinet of the owner
B Power Cabinet – 150 kW (HVC 150)
C HVC-PD kit ACM 150-450kW (including with Pantograph)
D Cables between Power Cabinet and HVC-PD kit
E Electric hybrid and/or full electric Bus
F Bus stop space for charging

The HVC-PD E-Bus Charger consists out of multiple components and it may require additional parts depending on the project and location of installation which dictates whether these parts are needed.

ABB offers a standard delivery system configurations with a DC charge power of 150, 300 or 450 kW. Additional needed components can be ordered separately and are not part of the standard delivery. See section *Accessories* on Page 19.

2.1.1. Standard HVC-PD 150 kW E-Bus Charger system

The following parts are provided for this system configuration:

- 1x HVC 150 Power Cabinet (ABB6AGC063474)
- 1x HVC-PD kit ACM 150-450kW (ABB6AGC069041) including:
  - 1x Pantograph (ACS)
  - 1x ACS Control Module (ACM)
  - 1x Junction Box

2.1.2. Standard HVC-PD 300 kW E-Bus Charger system

The following parts are provided for this system configuration:

- HVC 300P Power Cabinets (ABB6AGC069043):
  - 1x HVC 150 Power Cabinet
  - 1x HVC 150S Power Cabinet
- 1x HVC-PD kit ACM 150-450kW (ABB6AGC069041) including:

- 1x Pantograph (ACS)
- 1x ACS Control Module (ACM)
- 1x Junction Box

2.1.3. Standard HVC-PD 450 kW E-Bus Charger system

The following parts are provided for this system configuration:

- HVC 450P Power Cabinets (ABB6AGC069044):
  - 1x HVC 150 Power Cabinet
  - 2x HVC 150S Power Cabinet
- 1x HVC-PD kit ACM 150-450kW (ABB6AGC069041) including:
  - 1x Pantograph (ACS)
  - 1x ACS Control Module (ACM)
  - 1x Junction Box

	NOTICE
	The cables between the Power Cabinet(s) and HVC-PD kit ACM 150-450kW is not part of the order. See section *Cabling* on Page 47 for selecting the right cable type needed between the Power Cabinet(s) and Charge kit.

2.1.4. Power Cabinet

Outside view of the HVC 150 Power Cabinet

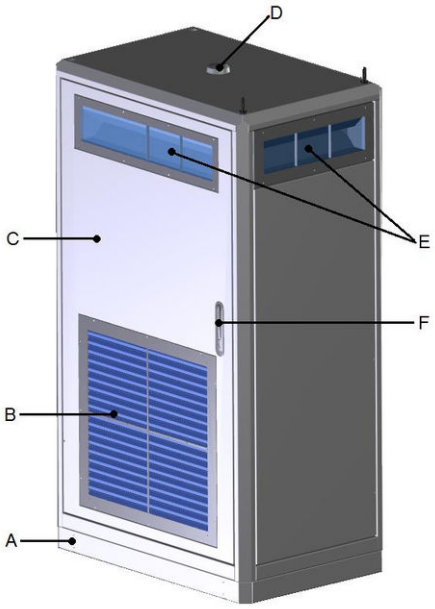

A Base cover
B Air outlet
C Door
D 3G Antenna
E Air inlets (also on the left and back side)
F Door handle / lock

Inside view of the HVC 150 Power Cabinet

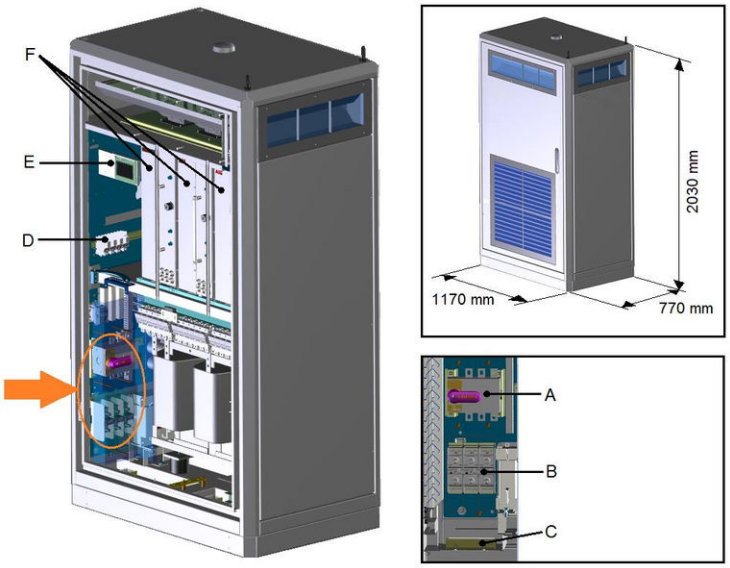

A Main switch
B AC Power connection
C Guidance plate of the cables
D Data/communication connection
E Display
F Power Modules

2.1.5. ACS Control Module

Outside view of the ACS Control Module

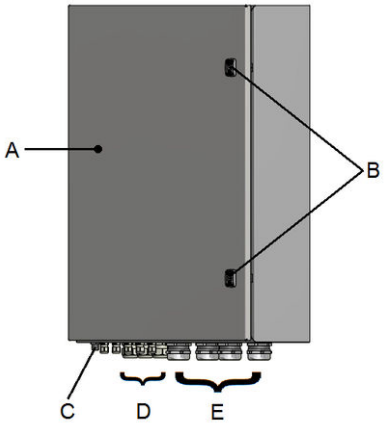

A Door
B Locks
C WiFi coax connector
D In- and outputs for cables from Power Cabinet and to pantograph
E In- and outputs DC power cables

Inside view of the ACS Control Module

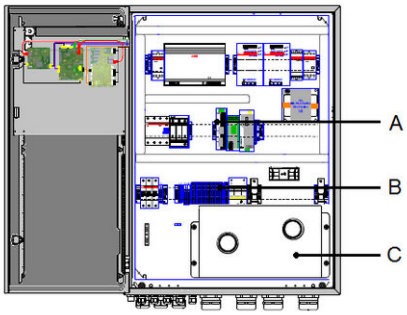

A Communication connection
B Connection block
C Protection cover for DC contactors

2.1.6. Junction Box

Outside view Junction Box

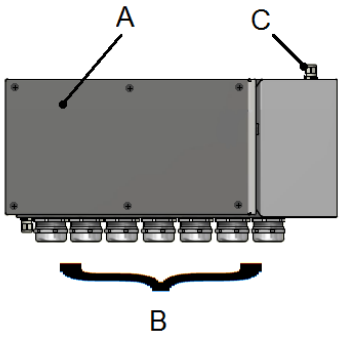

A Cover
B In- and outputs DC power cables
C Output DC- OVP sensing cable (cable is included, length is 750 mm)

2.1.7. Pantograph

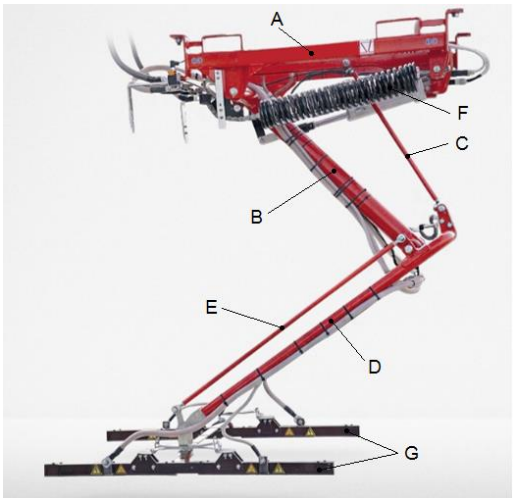

A Base frame
B Lower arm
C Lower guide rod
D Upper arm
E Collector head guidance
F Tension spring
G Collector head

2.2. Accessories

The following parts can be ordered at the time of the initial order or afterwards. Contact ABB Sales department (see *Contact information* on Page 14 for contact details).

2.2.1. Foundation for Power Cabinet

Concrete foundation
The concrete foundation can be used to install the Power Cabinet on soil.

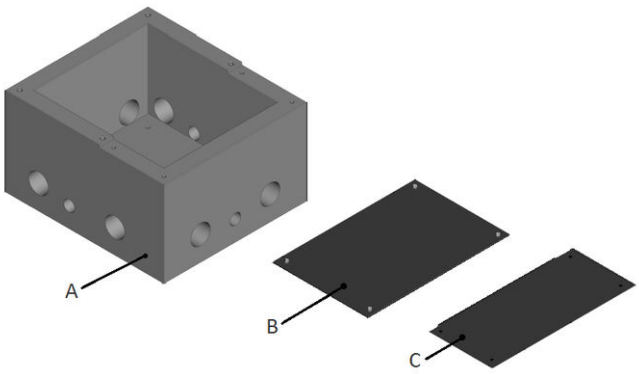

A Foundation
B Top cover plate
C Front cover plate

Amount	Part number	Description
1	ABB6AGC069029	HxC power cabinet foundation & front cover plate
1	ABB6AGC067780	HxC power cabinet foundation top cover plate

Metal frame foundation
The metal frame foundation can be used to install the Power Cabinet on a solid surface.

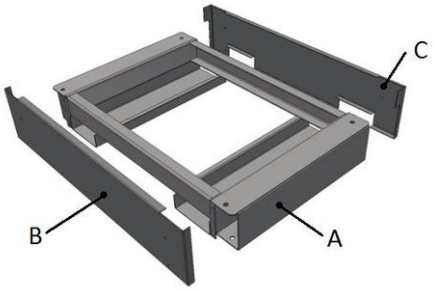

A Foundation
B Front border cover
C Rear border cover

Amount	Part number	Description
1	4EPY420133R1	HxC power cabinet metal foundation

2.2.2. Pantograph mounting brackets

Mounting brackets to safely mount the pantograph to an existing overhead structure.

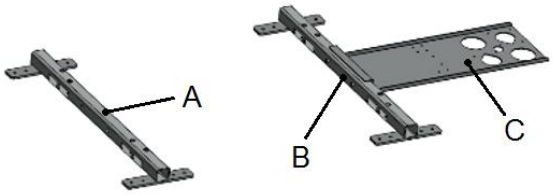

A Bracket for left side pantograph
B Bracket for right side pantograph
C Bracket for Wi-Fi antenna and RFID antenna

Amount	Part number	Description
1	ABB6AGC077380	HVC-PD kit mounting brackets

2.2.3. Wall-mounting brackets for safe wall fixing

The ACS Control Module can be easily mounted at the installation site without any need for internal access.



Amount	Part number	Description
1*	AWS41-304	Wall-mounting brackets, SS304 (ELDON)

(*) pack quantity is 4

2.2.4. Communication glass fiber cable

The CAN and Ethernet communication between the Power Cabinet and Charge control set is done via a glass fiber cable. This glass fiber cable must be prefabricated and can be ordered separately.
Cable length must be defined by the contractor performing installation during site survey.



Amount	Part number	Description
1	OM3, prefabricated	OM3, PCF or fiberglass (multimode, 850 nm) optic cable with 8 fibers (4 for spare), with B-FCO(ST®) connectors

2.2.5. Emergency unit



Amount	Part number	Description
1	1SFA619550R1051	CE4T-10R-02 Emergency stop button (ABB)
1	1SFA619811R1000	CEP1-0 Enclosure (ABB)

2.2.6. Charger state indicator light (beacon)

Beacon displays the status of the charging system.



Amount	Part number	Description
1	1SFA616070R3051	Red permanent light element with integrated LED, KL70-305R (ABB)
1	1SFA616070R3052	Green permanent light element with integrated LED, KL70-305G (ABB)
1	1SFA616070R3054	Blue permanent light element with integrated LED, KL70-305L (ABB)

There are different possibilities to mount the beacon. Depending on the installation situation, the right bracket can be ordered for mounting the beacon, see picture and table below.

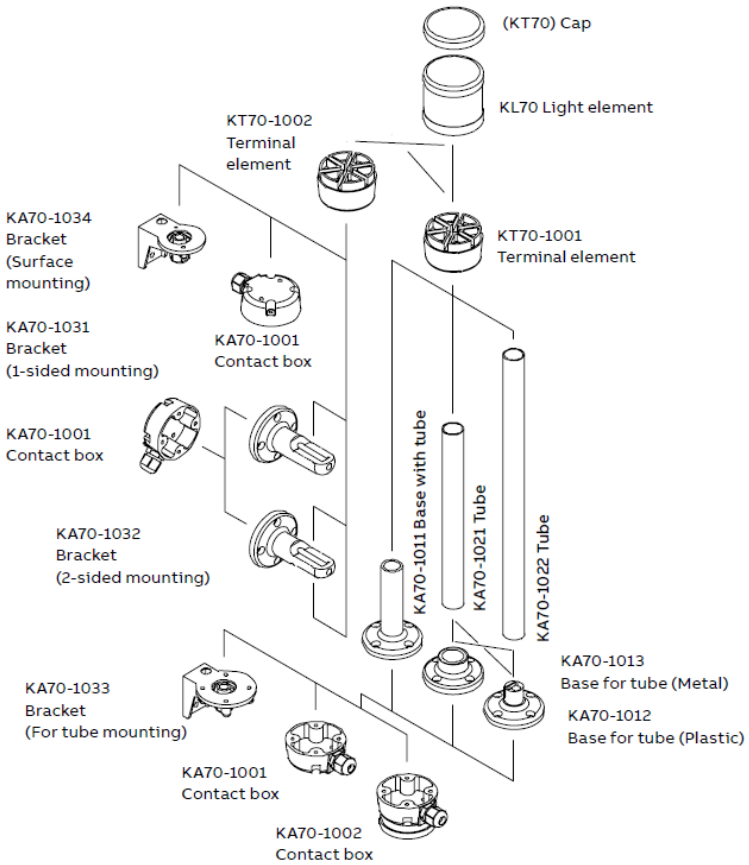

Description	Type	Order code
Terminal elements		
For tube mounting, including cap	KT70-1001	1SFA616075R1001
For bracket or base, including cap	KT70-1002	1SFA616075R1002
Special parts **Contact box**		
Cable exit at side	KA70-1001	1SFA616077R1001
Magnetic base	KA70-1002	1SFA616077R1002
Base with tube		
D=25 mm L=110 mm	KA70-1011	1SFA616077R1011
Base for tube		
D=25 mm, plastic	KA70-1012	1SFA616077R1012
D=25 mm, metal	KA70-1013	1SFA616077R1013
Tube, anodized aluminum		
D=25 mm L=250 mm	KA70-1021	1SFA616077R1021
D=25 mm L=400 mm	KA70-1022	1SFA616077R1022
D=25 mm L=800 mm	KA70-1023	1SFA616077R1023
Bracket		
1-sided mounting, max. 5 elements	KA70-1031	1SFA616077R1031
2-sided mounting, max. 10 elements	KA70-1032	1SFA616077R1032
For tube mounting	KA70-1033	1SFA616077R1033
For surface mounting	KA70-1034	1SFA616077R1034

2.2.7. WiFi antenna

The WiFi antenna is an essential part of the HVC-PD E-Bus Charger system. This takes care of the communication between the charger and the bus.



Amount	Part number	Description
1	1356.17.0008	SPOT-L Linear polarized directional high-gain Wi-Fi-Antenna (Huber+Suhner)

2.2.8. RFID unit

Needed when multiple Pantographs are installed close to each other (distance between each other is lower than 12 m).



Amount	Part number	Description
1	RFU 630-131xx (*)	RFID RFU63x (Sick)
1	SSL-2J04-G20ME (part 6036158)	RFID Ethernet cable 20 m (male connector, M12, 4-pin, straight, D-coded / male connector, RJ45, 8-pin, straight) (Sick)
1	2070427	RFID Power cable 10 m (female connector, M12, 17-pin, straight, A-coded) (Sick)

(*) The RFID unit is available for the following regions:

xx
00 = Europe / Saudi Arabia / South Africa
01 = USA / Canada / Mexico
02 = Australia
03 = India
04 = Brazil
05 = China
06 = Japan
08 = Russia / Belarus
10 = Korea
11 = New Zealand
12 = Indonesia
13 = Taiwan
15 = Morocco

3. Preparation

Before the final installation can start, a number of preparations must be made. This chapter describes the preparations that must be performed before the installation.

3.1. Project planning

Careful project planning is necessary before a HVC-PD Depot E-Bus Charger is purchased and put into operation. The different phases of the full project plan are shown in the figure below:

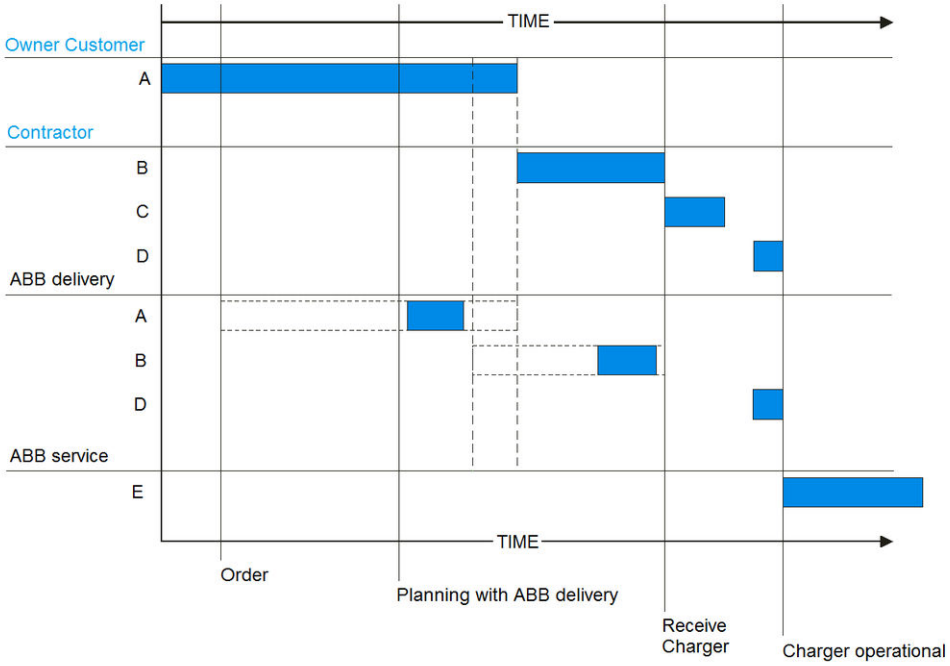

A. Preparation
The owner / site operator has ordered a HVC-PD Depot E-Bus Charger. In this phase all preparation work must be done before the contractor can do the civil and electrical works.

B. Construction
The contractor does all civil and electrical works. See *Construction* on Page 40

C. Placement and Connection
The location is mechanically and electrically ready to receive the HVC-PD Depot E-Bus Charger. See *About placement and connection* on Page 54.

D. Commissioning
The delivery department will bring the HVC-PD Depot E-Bus Charger into operation. See *Commissioning preparation* on Page 121.

E. Service and Maintenance
The HVC-PD Depot E-Bus Charger is in operation. There are various options for service and maintenance. See *About Service and Maintenance* on Page 123.

3.2. Grid connection

The HVC Power Cabinet requires high current (400 V AC 265 A) connections. A normal domestic or small business power connection is not sufficient.
The HVC 150 Power Cabinet can be connected directly to the electrical grid or to an existing customer low voltage power distribution cabinet. In both cases a 265 A (for the HVC 150), 400 V AC, 50 Hz, 3P+PE connection to the Power Cabinet is necessary that meets the following requirements:

- Fuse (gG type) 3 x 315 A AC or 3 phase 285 A circuit breaker.
- Main switch.
- PE connected to the main PE rail.
- The components used in the HVC 150 are suited for a short circuit capacity of 25 kA.
- A TN-C earthing system. Possibly an extra 0.9 Ω earth electrode is required, consult the grid owner.
- EMC filter is required to meet EMC conducted emission class B: Schaffner type FN 3359HV-400-99. When EMC conducted emission class A is required there is no filter required.
- Specifications of the following parts must be determined by your electrical engineer. They depend on local laws, safety and electrical regulations:
    - Adjustable RCD in the range of 30 mA up to 300 mA. The Power Cabinet has an integrated 300 mA RCD (Type A) for the power section.
    - Class 1 Surge Protection Device (SPD).

Measure, check and report the position of the cables between the power distribution board and the Power Cabinet and the cables between the Power Cabinet and the ACS Control Module.
Contact your electricity retailer and/or grid owner if a grid upgrade is required. Ask about the work that is needed to upgrade the connection to meet the requirements described in section *Electrical installation* on Page 37.

3.3. Internet access

The HVC-PD Depot E-Bus Charger requires a connection to the internet. This connection is used for serviceability, remote access by ABB Service department.

There are two options for the internet connection:

- Wireless, which requires coverage to a 3G network at the location. This is the preferred connection. A 3G modem with active SIM card is included with the HVC-PD Depot E-Bus Charger (a customer SIM card is not required).
- Ethernet (RJ45). If there is no 3G signal available, a wired internet connection must be available at the location. For this option, contact ABB Sales department (see *Contact information* on Page 14 for contact details).

3.4. Location

The location of the HVC-PD Depot E-Bus Charger must meet the following requirements:

- The height is not more than 2000 m above sea level.
- The HVC-PD Depot E-Bus Charger must not be immersed in water, or any other fluid.
- The operational temperature of the HVC-PD Depot E-Bus Charger is between -35 and 45 ºC.
    - For locations where the Power Cabinet will be exposed to direct sunlight and high ambient temperatures for most of the day, it is recommended to install

protection from direct sunlight. Otherwise the temperature inside the cabinet might exceed the maximum temperature.

- Do not install or use the HVC-PD Depot E-Bus Charger in areas where there is an explosion hazard. You must provide information about the HVC-PD Depot E-Bus Charger to the fire brigade.
- The protection rating of the housing of the Power Cabinet is IP54 and the ACS Control Module/Junction Box is IP65 and designed for outdoor use.
- The maximum cable length between Power Cabinet and ACS Control Module/Junction Box is 150 m. Take this into account when physically placing the Power Cabinet in relation to the ACS Control Module/Junction Box.
- The maximum cable length between ACS Control Module and Pantograph is 20 m. Take this into account when physically placing the ACS Control Module in relation to the pantograph.
- It is recommended to provide good lighting around the charge system to increase safety.
- Design and arrange the location around the HVC-PD Depot E-Bus Charger on a matter that the Depot Charge Box and the Power Cabinet are hit by a vehicle is as small as possible. For example, there can be installed bollards (see picture below) around the Power Cabinet.

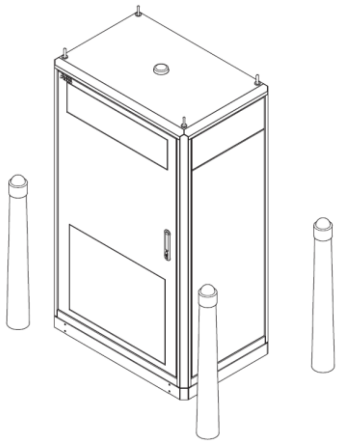

3.5. Geometry of infrastructure

3.5.1. Required space for the Power Cabinet

A single HVC 150 Power Cabinet requires a minimum floor space of 1170 x 2070 mm (W x D) or 1370 x 1970 mm (W x D). This space is calculated as follows:

- A cabinet footprint of 1170 x 770 mm.
- The following free space around the cabinet:
  - 100 mm at the rear side or 0 mm at the rear side when both left and right side have a minimum free space of 100 mm.
  - 100 mm or 0 mm at the left side, if another Power Cabinet is placed next to it.
  - 100 mm or 0 mm at the right side, if another Power Cabinet is placed next to it.
  - 1200 mm at the front side in order to open the front door. If the cabinet is placed inside a room, consider extra free space in front of the open door (escape way for service people).

	CAUTION
	The cabinet needs at least the opening area of the front and rear side with a minimum free distance of 100 mm. This means that cabinets can stand in a row with one or both side entries blocked (distance on left/right side is 0 mm). It is also possible that the cabinet can stand back to back (distance on the rear side is 0 mm). In this case both side entries must have a minimum free distance of 100 mm. If this is not the case, then the air supply is not sufficient.

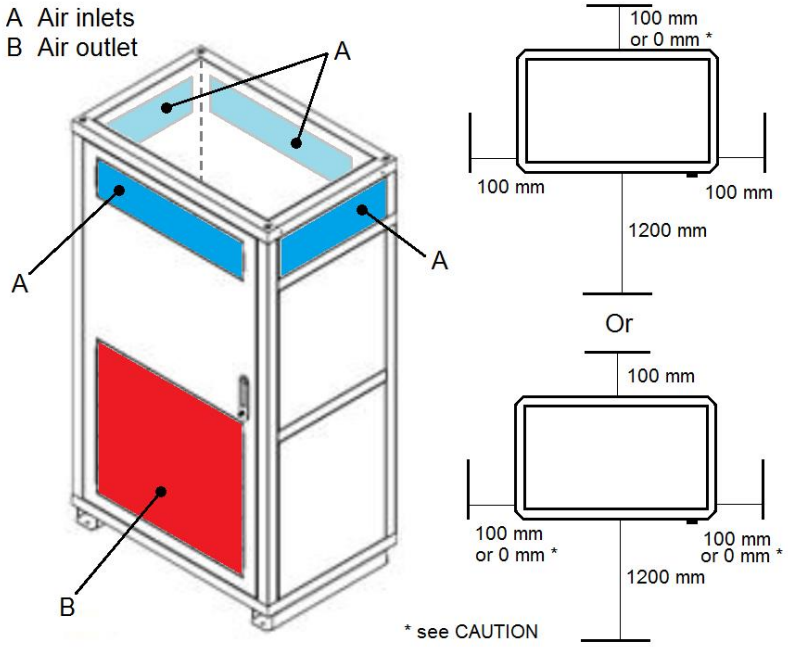

The HVC 150 has air inlets (A) on all sides and air outlet (B) on the front to control the temperature inside the cabinet. Do not install any objects near these air inlets and outlets (see also Caution above). If necessary, take precautions to prevent snow, sand or dust from blocking the inlets and outlets.

Specifications for inside installation of the Power Cabinet

- Airflow required for one cabinet = 1450 m^3/h.
- Maximum allowed pressure drop = 300 pA. If the pressure drop of the room is higher than 300 pA an extra fan should be placed. Contact ABB Sales department (see *Contact information* on Page 14 for contact details).

3.5.2. Placement of multiple cabinets

There two possible configurations for the placement of multiple HVC 150 systems, see picture below.

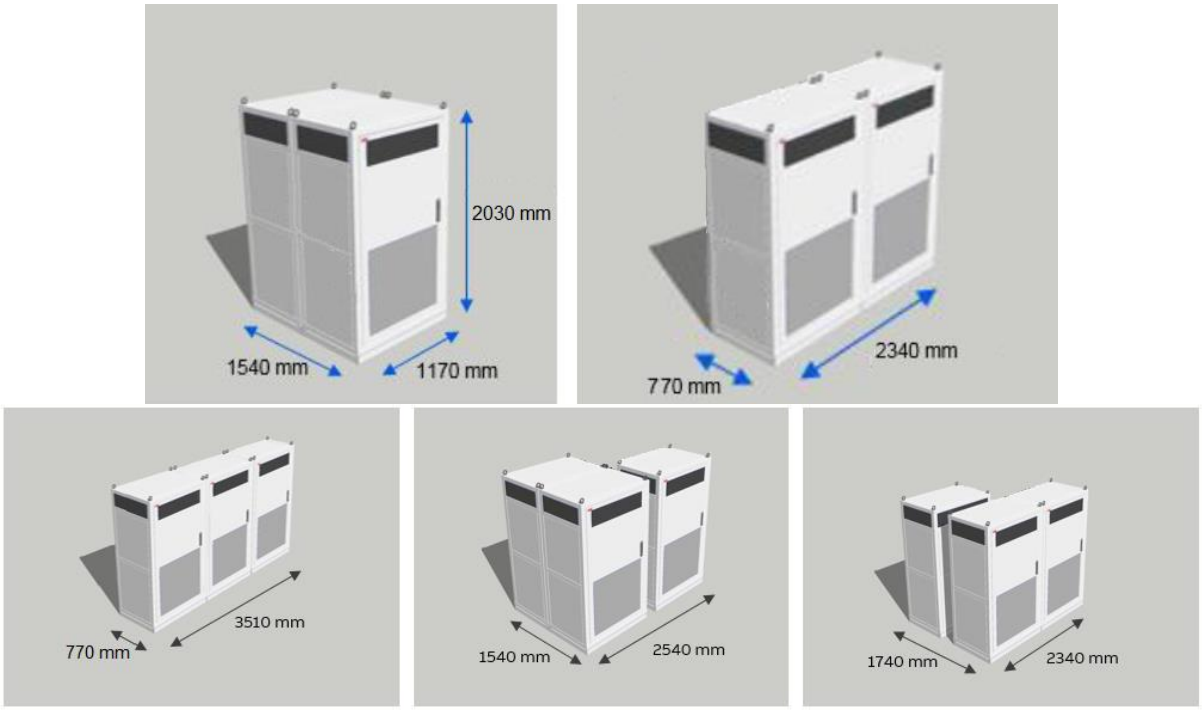

3.5.3. Required space for the ACS Control Module/Junction Box

The ACS Control Module and Junction Box must be mounted on a wall. The following requirements must be taken into account when determining the location of the ACS Control Modules and the Junction Box:

- The following minimum free space:
  - 100 mm at the left and right side.
  - 900 mm at the front side to open the door.
- The Junction Box (B) must be placed under the ACS Control Module (A) with a maximum distance of 300 mm.
- It is rec ommended that the ACS Control Module be placed at working height (approximately 1094 mm).

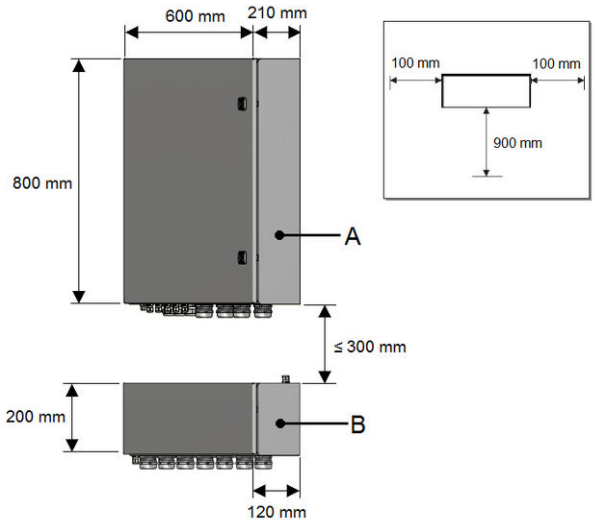

3.6. Pantograph position in relation to the bus

It is important that the pantograph has the good position in relation with the bus, so that the pantograph's collector head can make physical contact with the interface rails on the bus roof. In general the bus has a certain freedom degree to position under the pantograph:

- Z-axis = 560 (± 280) mm → longitudinal axis;
- Y-axis = 500 (± 250) mm → transversal axis;
- X-axis = 1150 mm → vertical axis;
- When the road is horizontal and the top of road (TOR) is flat (no wear);
- Compensation of angles: X-axis ≤ 3.5º, Z-axis ≤ 2.5º.

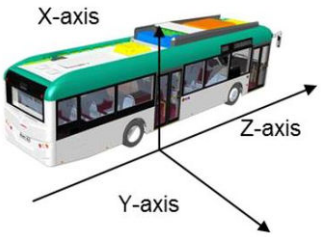

	NOTICE
	ABB can help with the calculation of the position of the Pantograph. Contact ABB Sales department (see *Contact information* on Page 14 for contact details).

3.6.1. Pantograph position in relation to the drive direction of the bus

Note: the following example is with respect to a bus which has the contact rails directly above the front wheelbase.
The front wheelbase is exactly below the power charge connection rails on the roof of the bus. So the center of the pantograph in Z-axis should be in line with the center of the front wheel of the bus.

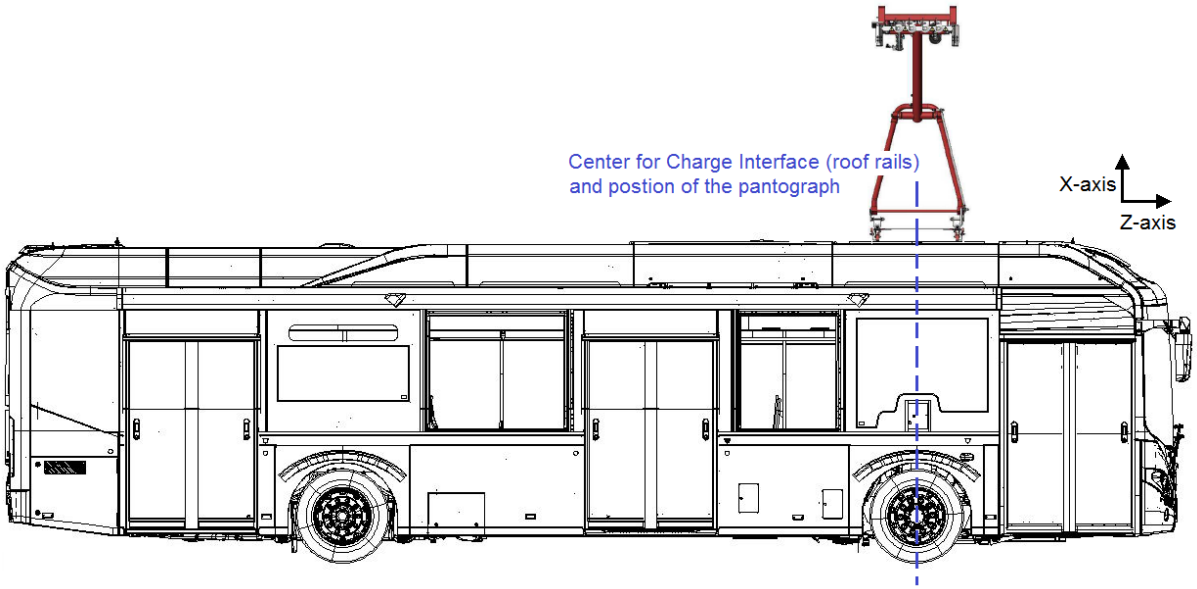

3.6.2. Pivoting of the collector head around the pantograph axis (Z-axis)

The collector head of the pantograph can compensate for inclination about the Z-axis to a minor extent tolerance.
When the collector head gets in contact with the contact rails on the bus roof an inclination of the bus roof of ±1.5° is allowed.



3.6.3. Maximum allowed slope of the pantograph in Z-axis

The maximum inclination of the pantograph in Z-axis is 2.5°. This allows to compensate a slope of the floor space of the bus (road gradient), see section *Pivoting of the collector head around the pantograph axis (Z-axis)* on Page 30.

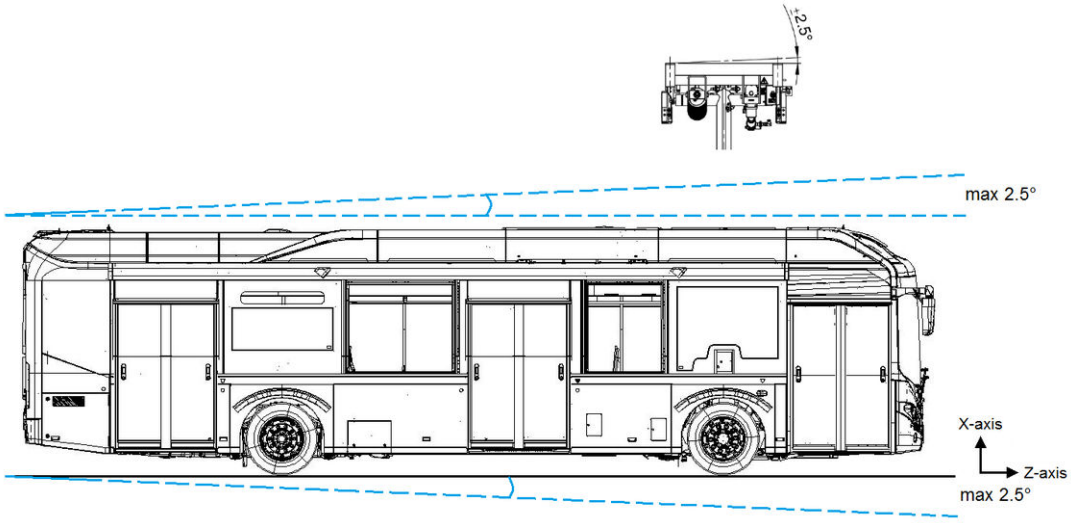

3.6.4. Pantograph position in X-axis (height relative to TOR)

How high the pantograph should be placed depends, among other things, on the height of the contact rails that are placed on the roof of the bus. The picture below shows the working area of the pantograph.

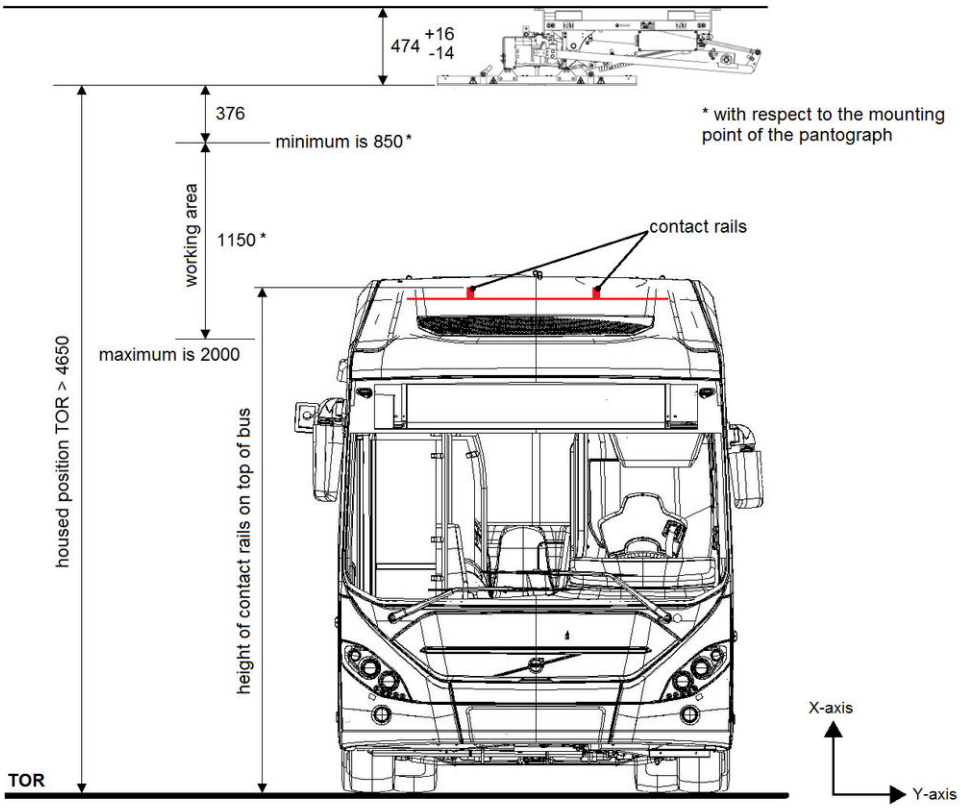

The working area in which the pantograph has a the right force to make contact force with the contact rails is 1150 mm; the upper working position is 850 mm and the lower working position is 2000 mm measured from the mounting point of the pantograph (see picture above). This means that the contact rails must be in the working area of the pantograph. So the height of the contact rails on the roof of the bus relative to the TOR and the working area of the pantograph determines how high the pantograph can be placed with respect to TOR. Bear in mind that the pantograph is sufficiently high when in housed position that no other vehicles can hit the pantograph.

3.6.5. Pantograph position in Y-axis in relation with the bus

The picture below shows the correct position of the pantograph with respect to the position of the bus; the center of the pantograph's collector head must be aligned with the center line of the bus in Y-axis. Be aware this is in case the road is flat and doesn't have an angle in the sideway direction of the bus, else the minimum and maximum distance need to be re-calculated.
The maximum deviation in Y-Axis may be ± 250 mm with respect to the center line of the bus.

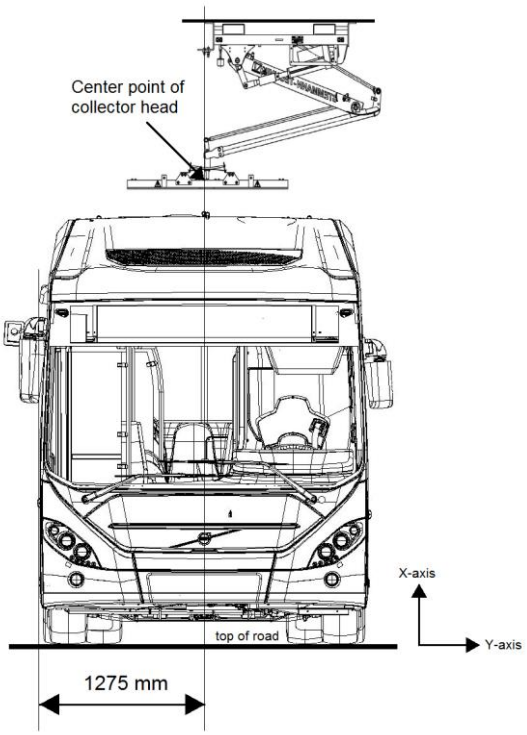

The picture below shows the curve the collector head of the pantograph make when lowering down. The -474 mm is the start position of the collector head measured from the mounting point of the pantograph. This S-curve must be taken into account when determining the correct position of the pantograph in the Y-Axis.

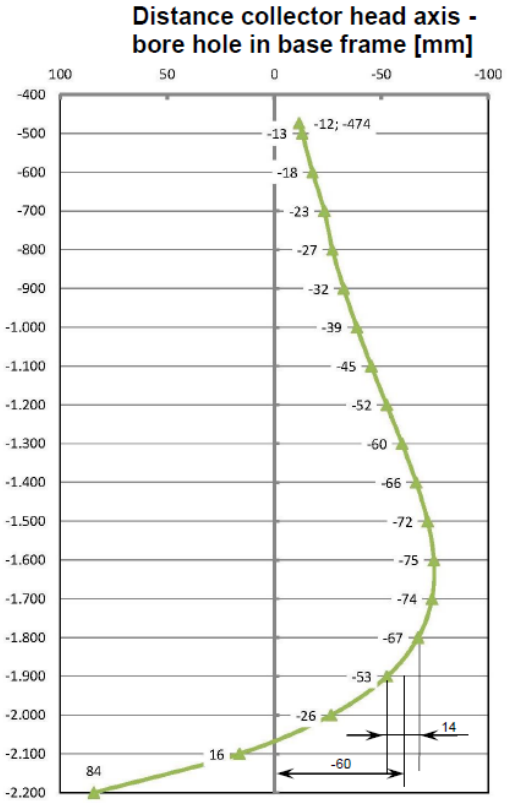

S-curve of the collector head during lowering into different working heights

Due to the S-curve of the pantograph offsets result for the working area in Y-Axis of -75mm to +84mm.
Due to the S-curve the height of the bus has to be taken into account when positioning the pantograph above the road so that the vehicle can be positioned at the low accuracy of ± 250 mm in Y-Axis always. Otherwise the tolerance for the positioning of the vehicle more strictly:

Example[2]:
The pantograph works between the working height of -1800 mm and -1900 mm, according to TOR = 3340 mm and TOR = 3240 mm. The position tolerance of the pantograph in Y-Axis is ± 250 mm.

The S-curve shows for the working height -1800 mm a Y-Axis of the collector head center of -67mm and for the working height of -1900 mm a Y-Axis of the collector head center of -53 mm related to the 0-line, which passes through the center of the front bore hole of the pantograph.

The difference in Y-Axis is thus 14 mm (|-67| – |-53| = 14). The collector head center will shift to the relevant working heights to -60mm in Y-direction.
The Y position of the collector head center lays in relation to the center of the front bore hole of the pantograph at -60 mm (-53 - 14/2 = -60) and will vary by ± 7 mm. This results in a working area in Y-Axis of ± 183mm (250 – 60 -7 = 183).

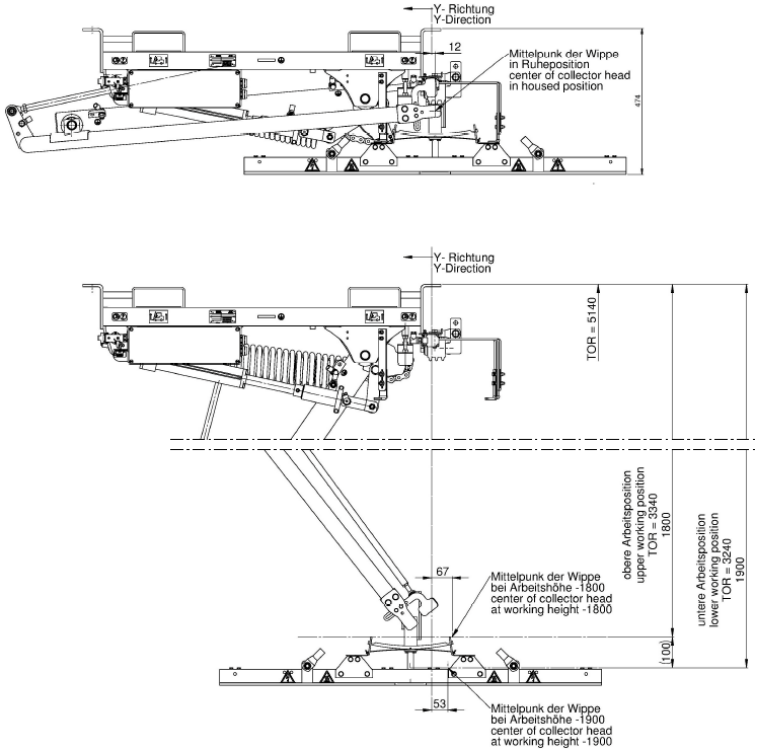

Shifting of the collector head center due to the S-curve

The hinge point of the pantograph's arms is always located on the right side of the bus (seen from the front of the bus), shown in the figure that follows:

[2] Reference: taken from "Single Arm Pantograph", document Stemmann-Technik 0Fb206.03

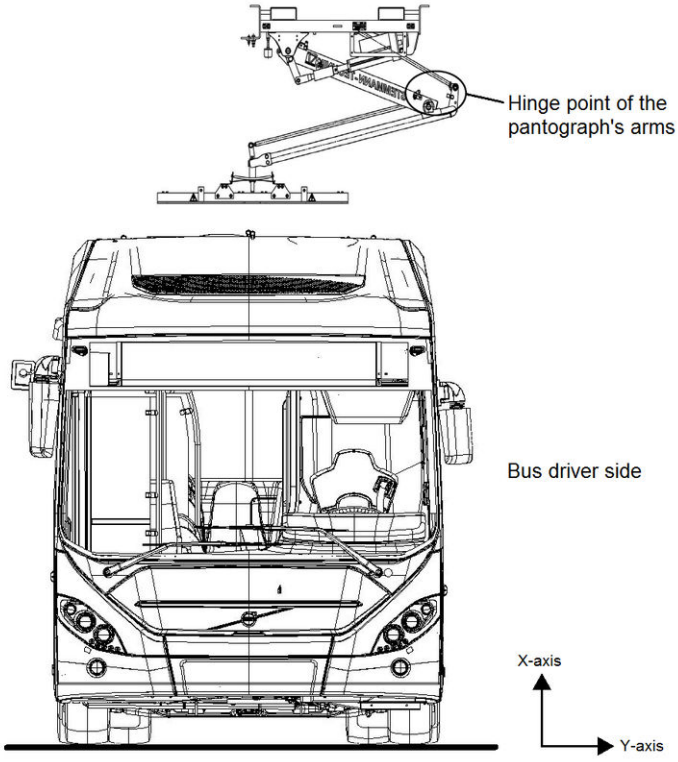

In this case the pantograph's collector head make the right electrical contact with the contact rails on the roof of the bus, see picture below.

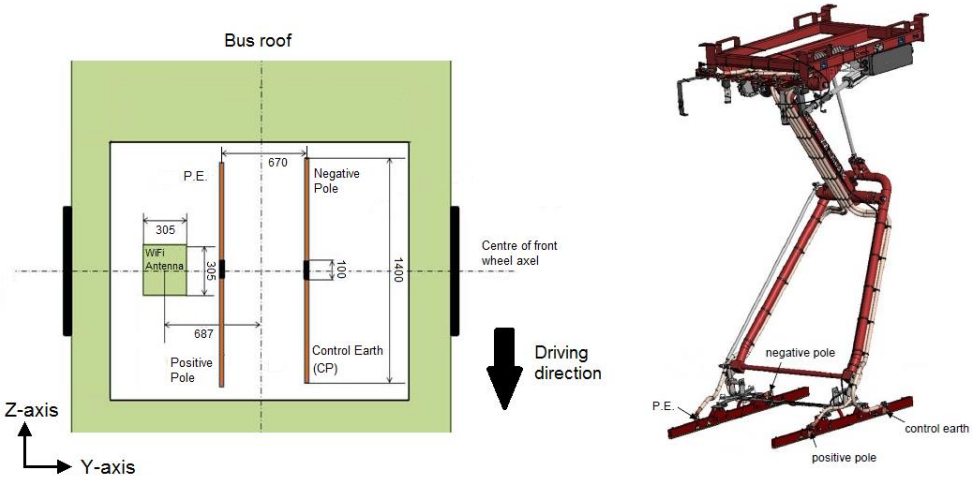

3.6.6. Maximum slope of the road in X-axis

The maximum slope of the road sideways direction is 3.5º, **including** the kneeling of the bus. This will shift the top of the bus 200 mm (assuming a height of 3280 mm from the bus) relative to the center of the bus. So the displacement caused by the road angle should be taken into account calculating the position of the Pantograph in X-axis with respect to the bus.

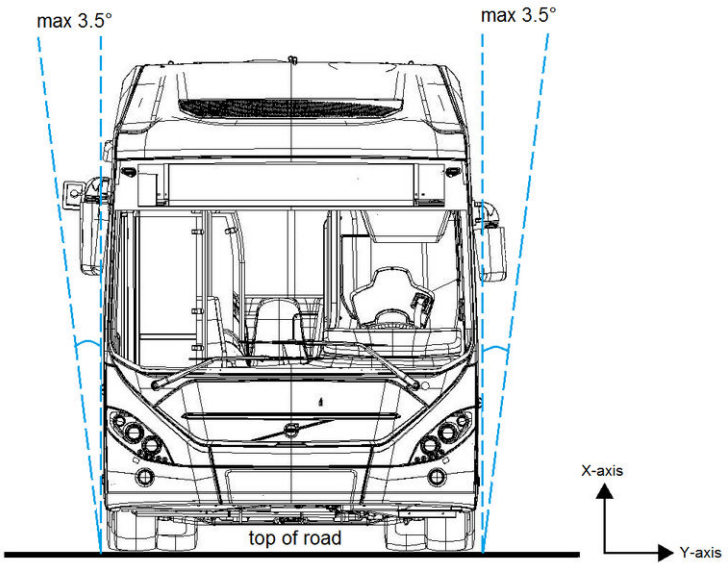

3.7. WiFi antenna position in relation to the bus

The WiFi antenna is an essential part of the HVC-PD E-Bus Charger system. This takes care of the communication between the charger and the bus. To establish good communication, the WiFi antenna must be located above the WiFi receiver/transmitter on the bus during the charge session. The picture below shows the location of the WiFi receiver/transmitter on the bus and the position of the WiFi antenna with respect to the pantograph.

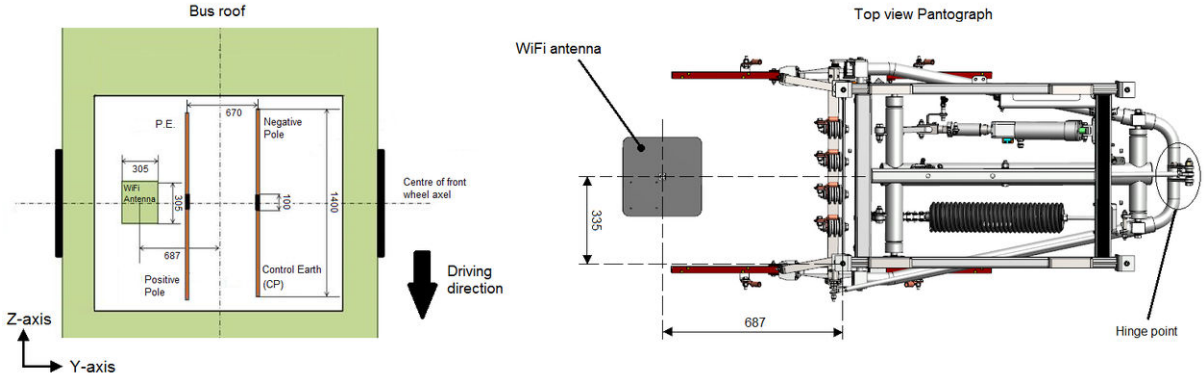

The WiFi antenna is always located on the other side of the pantograph's hinge point (see picture above).
Do not place the WiFi antenna higher than the Pantograph.

The WiFi antenna can be used in linear vertical or horizontal polarised direction. In the HVC-PD E-Bus Charger system the WiFi antenna is orientated with the according to the indicated sign on its back plane "Hor.Up" in the drive direction of the bus, see picture below.

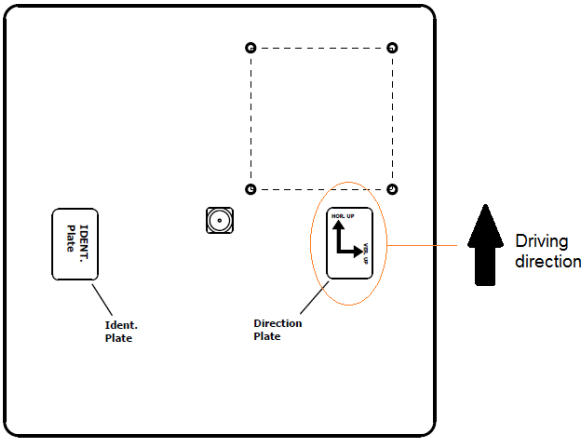

Top view WiFi antenna

3.8. Electrical engineering

3.8.1. Electrical installation

The electrical installation must be completed according to the local safety and electrical regulations and laws. See section *Grid connection* on Page 26 for the requirements of the electrical connection. A one line diagram for the electrical grid connection for the Power Cabinet is shown in the figure that follows. The diameter of the electrical conductor (maximum cross section is 240 mm^2) in the AC power cable depends on the length and method of installation. This must be determined by your contractor.

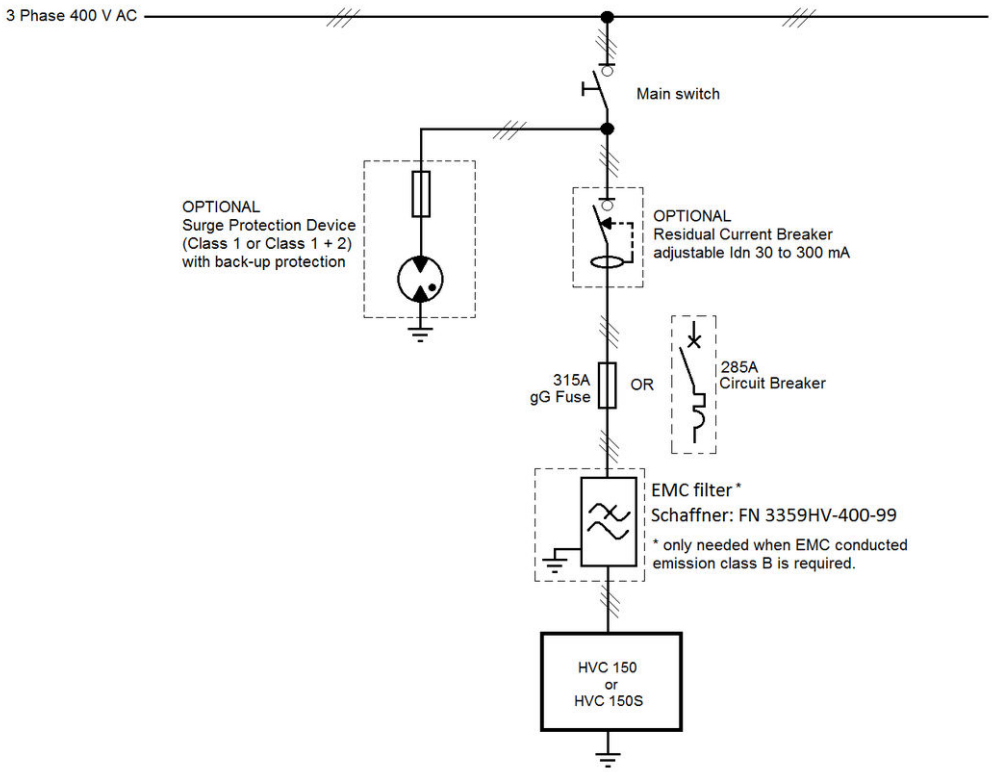

The activities of installing cable conduits (for underground), ducts or trays for the supply of cables between the different parts of the HVC-PD Depot E-Bus Charger, are entirely dependent of the location, and may differ per location. Due to this reason, the installation of those cable conduits, ducts or trays our out of the scope of this Installation Guide.

It is the responsibility of the contractor to setup a routing plan for the cable conduits, ducts or trays for the installation on location.

3.9. Civil installation

	NOTICE
	The instruction described in this section assumes that the cables between the Power Cabinet and the ACS Control Module are placed in to the ground. Depending on the location, for example the HVC-PD Depot E-Bus Charger is installed inside, the cables can installed above the ground. In this case there is needed cable ducts or trays to protect the cables. Check with your local contractor what the installation options are, because this is not described in this Installation Guide.

DC power cables, AC utility power cable, PE wire and data cables must be routed between the Power Cabinet and the Charge control set. Therefore two (flexible) cable conduits with an outer diameter of 160 mm must be installed between the foundation of one of the Power Cabinets and the position where the ACS Control Module is mounted.
The DC power cables must be installed in separate cable conduit with respect to the AC utility power cable, PE wire and data cables. The maximum length of the cables between the Power Cabinet and the ACS Control Module is 150 m. Both conduits must be at least 600 mm deep in the ground and must be in one-piece.
The AC power cable from the distribution board can also be installed in a cable conduit (is not mandatory).

	NOTICE
	It is recommended to place an extra flexible cable conduit with an outer diameter of 40 mm in the cable conduit intended for the AC utility power cable, PE wire and data cables. This extra cable conduit is meant for the glass fiber cable.

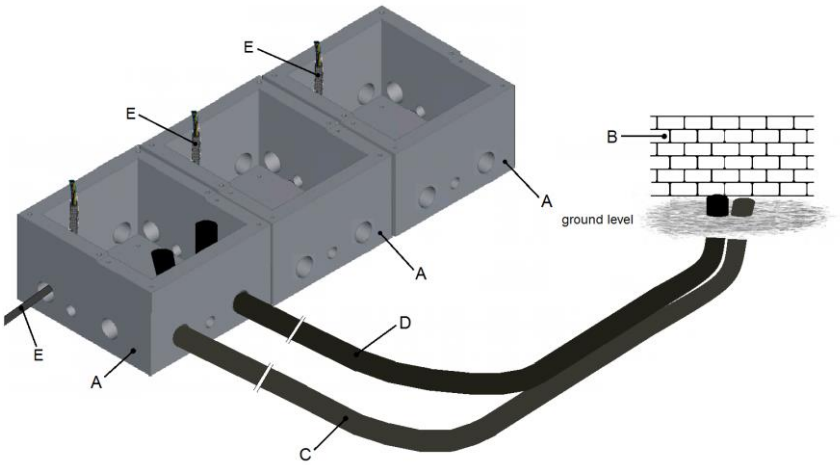

Example of civil installation when ACS Control Module is mounted on a wall (450 kW Charge system)

A Foundation of Power Cabinet
B Wall on which the ACS Control Module and Junction Box will be mounted
C Flexible conduit for DC power cables
D Flexible conduit for AC auxiliary power, PE wire and data cables
E AC power cable for Power Cabinet

	NOTICE
	Document the location of all the cables in the ground between the Power Cabinet and the ACS Control Module. The routing of the cables can be found easily in the future, for example, prevent damage by excavation work.

3.10. Lightning protection

One electrode (ground rod) of maximum 10 Ω must be placed in to the earth near the foundation of the Power Cabinet. In some cases also additional grounding is required at the ACM Control Module side. This is dependent on the local regulations and should be determined by the contractor.
If the grid is TT based, consult the grid owner. It is possible that an extra 0,9 Ω electrode will be required. This requirement must be determined by the contractor.
Consult a local specialist for the options of lightning protection. The charge system has to be within the protection angle of the lightning distraction. This requirement must be determined by the owner and a local specialist (according to NEN-EN-IEC 62305).
The implementation of the lightning protection depends on the local laws, safety and electrical regulations. This requirement must be determined by the contractor and owner of the site / HVC-PD Depot E-Bus Charger.

4. Construction

The construction phase includes all work required to prepare the location and make it ready for the placement and connection of the HVC-PD Depot E-Bus Charger. The construction phase can start when:

- All engineering work is done.
- All permits are granted.
- The grid connection is available.

4.1. Construct foundation of the Power Cabinet

4.1.1. Options

Use the correct foundation for the type of surface that the Power Cabinet will be installed on:

- **Soil**
  Use a concrete foundation to get a firm fixation on soil.
  A concrete foundation can be ordered separately. See section *Accessories* on Page 19. For detail drawings see Appendix D *Dimensions concrete foundation Power Cabinet*.
- **Solid floor**
  1. Use a metal frame foundation to guide the cables from the cabinet to the cable duct. This foundation can be ordered separately. See section *Accessories* on Page 19. For detail drawings see Appendix E *Dimensions metal frame foundation Power Cabinet*.
  2. The Power Cabinet is installed directly on a solid floor, through which the floor is accessible from below (related to the feed through of the cables). For detail drawings see Appendix A *Dimensions Power Cabinet*.

The cables must be embedded in the ground within cable conduits. See section *Cabling* on Page 46 and section *Civil installation* on Page 38.

	**NOTICE** It is advised to install traction wires into the conduits to install the electrical cabling afterwards.
	**NOTICE** Be aware of the bending radius of the AC power input cables when using the metal frame foundation. This metal frame foundation has a height of 180 mm.

4.1.2. Workflow with concrete foundation

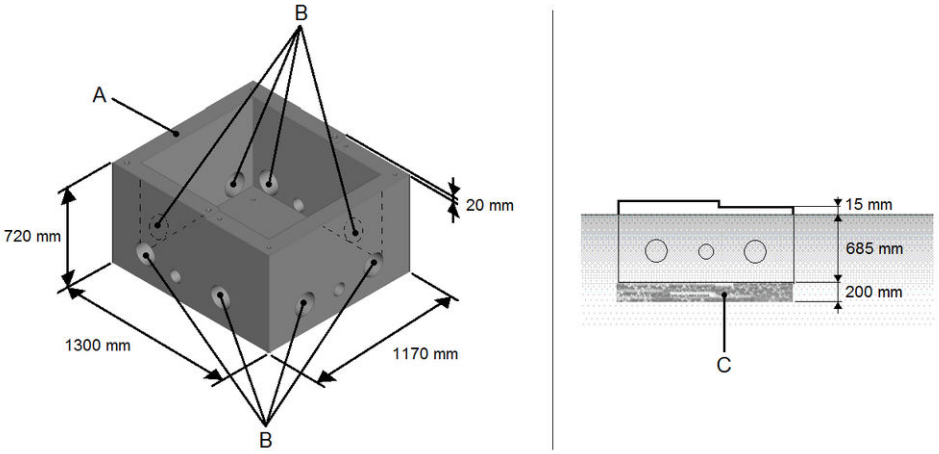

	**WARNING** Make sure that personnel cannot be crushed or become trapped while moving the foundation. Be aware that the weight of the concrete foundation is about 1300 kg.
	**CAUTION** Before you lower the foundation, remove sharp edges of the cable holes (B) in the foundation to protect the cables.

1. Make a hole in the ground with at least a minimum depth of 885 mm, shown in the figure above.
2. Fill the hole with (minimum) 200 mm lean concrete (C), see figure above.
3. Make sure that the conduits are routed to one of the indicated positions (B). The conduits must come out of the foundation with a length of about 250 mm.
4. Make sure that the AC power cable is routed to one of the indicated positions (B).
5. Lower the foundation (A) into the hole.
6. Make sure that the front top surface of the foundation is at least 15 mm above ground level (see figure above).
7. Make sure that the top surface of the foundation is leveled.
8. Route the conduits through one of the eight holes (B).

	**NOTICE** Make sure that the end of the cable conduits are 300 to 500 mm above the top of the foundation.

9. The conduits must be installed with a curve inside the foundation in order to prevent water from entering the conduits, and seal the space between the conduits and all open holes.
10. Route the AC power cable through one of the eight holes (B). Make sure that a cable length of 1000 mm is available above the surface of the foundation for internal routing in the cabinet.

	NOTICE
	This extra cable length is required to connect the AC power cable with the connectors in the Power Cabinet without problems.

11. Place both cover plates on the appropriate place on the foundation.

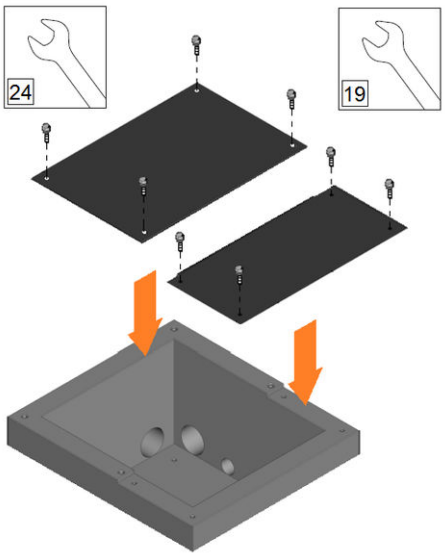

12. Secure the top cover plate with M16 bolts (4x) and the front cover plate with M12 bolts (4x).

	WARNING
	These cover plates are required to prevent people from falling into the foundation.

13. Fill the open space in the ground around the foundation and the channels for the conduits with filling material (e.g. sand). Filling material is packed 2 – 3 times with a packing machine until the desired ground level is obtained. Avoid having filling material inside the foundation.

4.1.3. Workflow with metal frame foundation

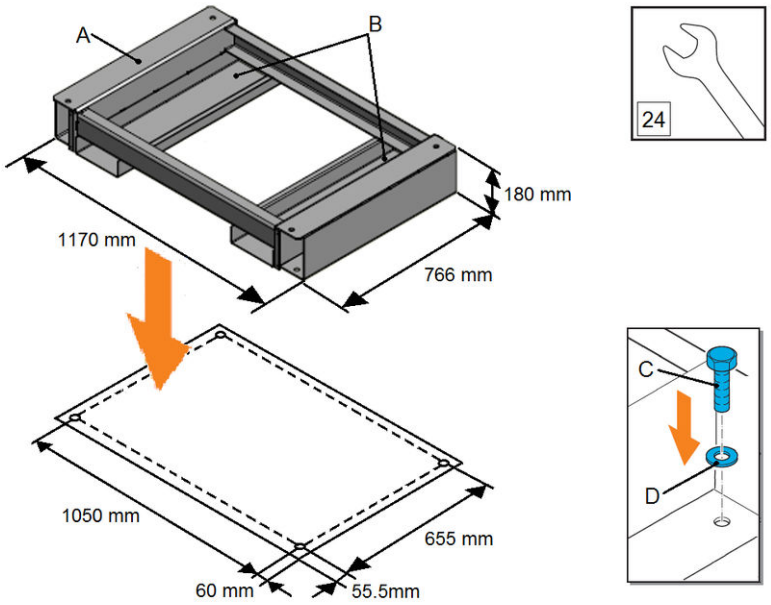

1. Place the frame (A) in the desired position and mark the position of the holes for drilling.

	NOTICE
	The hole distance of 655mm on either side of the metal frame foundation is not equal to the hole distance (680 mm) from the HVC 150(S) cabinet. See also the mechanical drawing in Appendix G *Dimensions Metal Foundation Power Cabinet* on page 138.

2. Remove the frame.
3. Drill and tap holes at the marked positions. The holes must be suitable for bolt size M16.
4. Route the cables tray through one of the cable openings (B).
5. Align the frame (A) with the tapped holes.
6. Insert the bolts (C) fitted with the washers (D) into the holes (4x).
7. Tighten the bolts.
8. Route the AC power cable through the left cable opening (B). Make sure that a cable length of 1000 mm is available above the floor for internal routing in the cabinet.

	NOTICE
	This extra cable length is required to connect the AC power cable with the connectors in the Power Cabinet without problems.

4.1.4. Workflow mounting Power Cabinet direct on a floor (footprint)

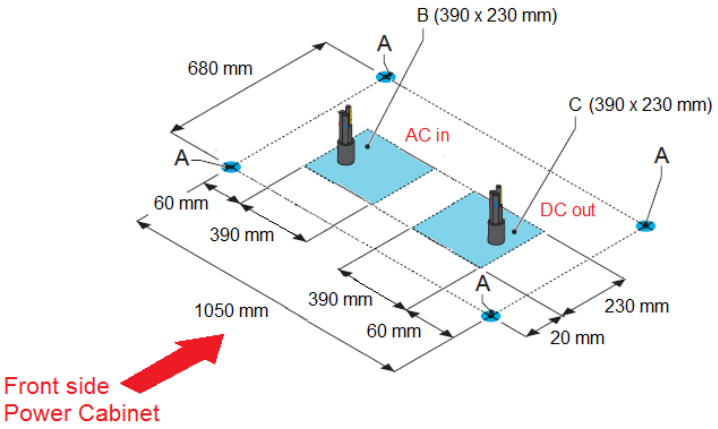

1. Drill and tap holes in the floor at the indicated positions (A). The holes must be suitable for bolt size M16.
2. Make rectangular holes on the indicated positions (B) and (C). For detail drawings bottom view of Power Cabinet see Appendix A *Dimensions Power Cabinet*.
3. Make sure that the AC power cable and other cables comes out of the floor within the marked area (B).
4. Make sure that the DC power cables come out of the floor within the marked areas (C).
5. For the AC and DC power cable, make sure that a cable length of 1 m is available above the floor for internal routing in the cabinet.
6. For the other cables, make sure that a cable length of 3 m is available above the floor for internal routing in the cabinet.

	NOTICE
	This extra cable length is required to connect the cables with the connectors in the Power Cabinet without problems.
	NOTICE
	To prevent dust from entering the tapped holes, it is recommended that you cover them until you are ready to do the placement.

4.2. Mounting preparation of the ACS Control Module

4.2.1. Options

There is one option to install the ACS Control Module:

- **Wall mounting**
  The ACS Control Module can be mounted on a solid wall.

4.2.2. Workflow for wall mounting

Preconditions:

- Parts: 4x wall plugs (Ø10 mm, L = 50 mm).
- Tools: mark tools, level tool, drilling machine, drill bit (Ø10 mm or Ø7.5 mm).

	NOTICE
	For a correct operation of the ACS Control Module, it is important that the cabinet is mounted level.

There are two options to mount the ACS Control Module on a wall:

- Using the internal holes of the box itself on the back side.

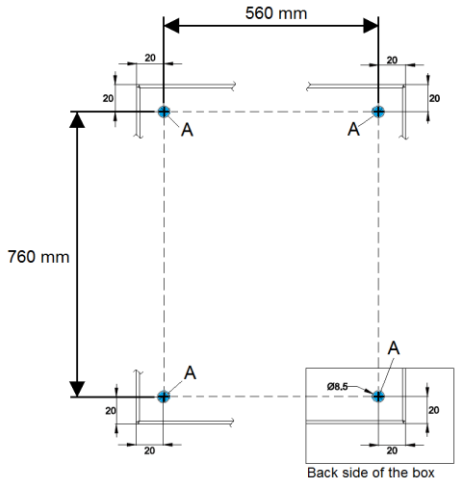

- Using external wall-mounting brackets, see section *Wall-mounting brackets for safe wall fixing* on Page 20.

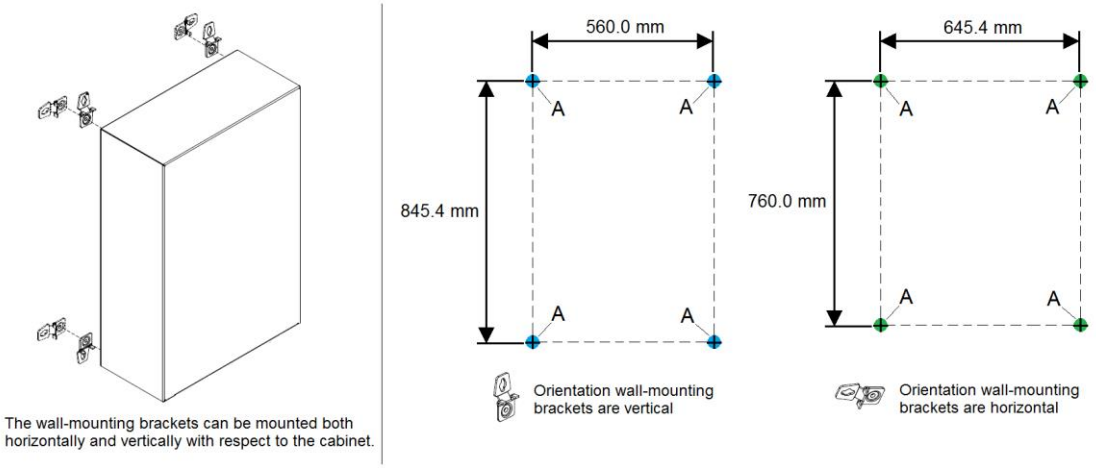

1. Drill holes in the wall at the indicated positions (A) of one of the chosen mounting options (see pictures above). For a concrete or stony wall, the holes must be suitable for a wall plug with a diameter of 10 mm. For a wooden wall, the holes must be suitable for wood-wire-bolt size M8.
2. In case of a concrete or stony wall, insert wall-plugs (4x) in to the holes.

	NOTICE
	The activities of installing cable ducts, for the supply of cables for the ACS Control Module, are entirely dependent of the location, and may differ per location. Due to this reason, the installation of those cable ducts our out of the scope of this Installation Guide. It is the responsibility of the contractor to setup a routing plan for the cable ducts, and installing this cable ducts on location.

4.3. Mounting preparation of the Junction Box

4.3.1. Options

There is one option to install the Junction Box:

Wall mounting

- The Junction Box can be mounted on a solid wall.

4.3.2. Workflow for wall mounting

Preconditions:

- Parts: 4x wall plugs (Ø10 mm, L = 50 mm).
- Tools: mark tools, level tool, drilling machine, drill bit (Ø10 mm or Ø7.5 mm).

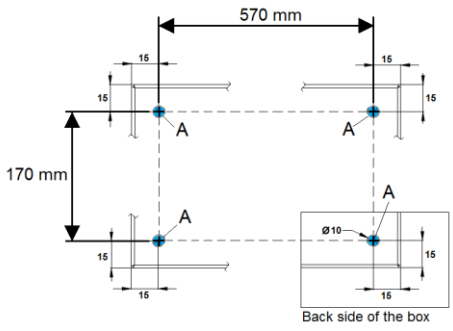

1. Drill holes in the wall at the indicated positions (A) of one of the chosen mounting options (see pictures above). For a concrete or stony wall, the holes must be suitable for a wall plug with a diameter of 10 mm. For a wooden wall, the holes must be suitable for wood-wire-bolt size M8.
2. In case of a concrete or stony wall, insert wall-plugs (4x) in to the holes.

	NOTICE
	The activities of installing cable ducts, for the supply of cables for the Junction Box, are entirely dependent of the location, and may differ per location. Due to this reason, the installation of those cable ducts our out of the scope of this Installation Guide. It is the responsibility of the contractor to setup a routing plan for the cable ducts, and installing this cable ducts on location.

4.4. Cabling

4.4.1. Charge system configurations

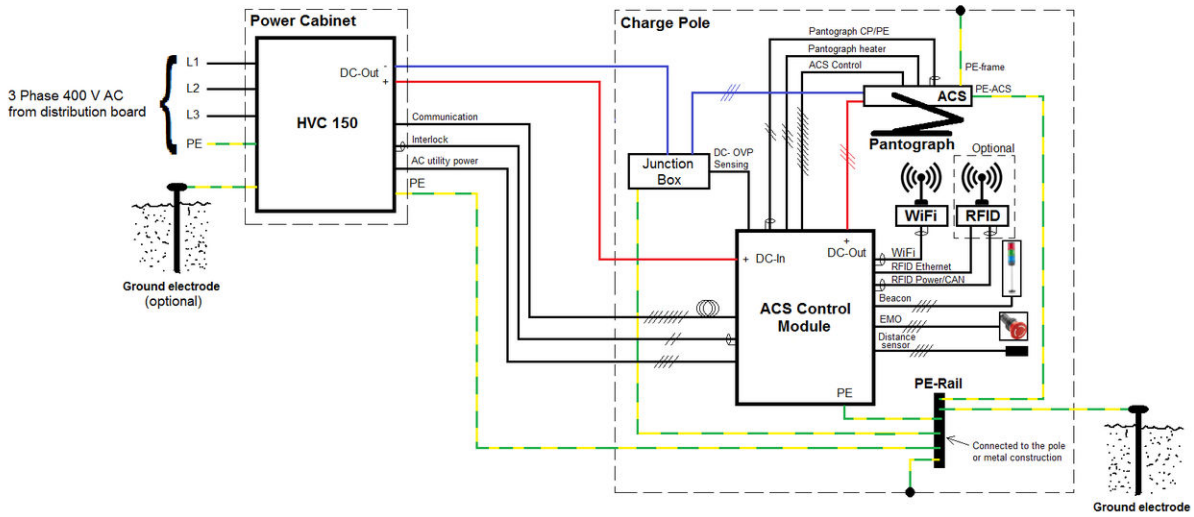

Overview electrical connections of a HVC-PD 150 kW charge system

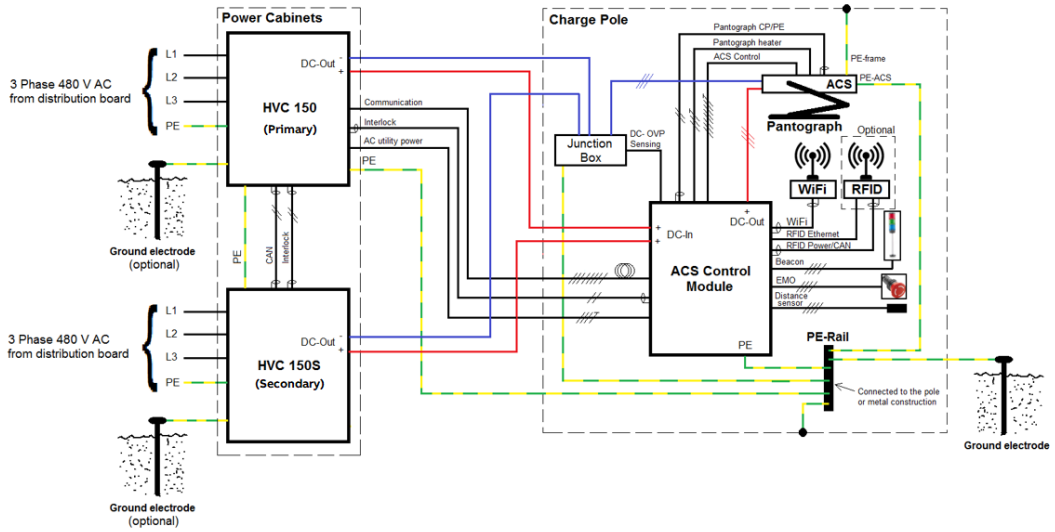

Overview electrical connections of a HVC-PD 300 kW charge system

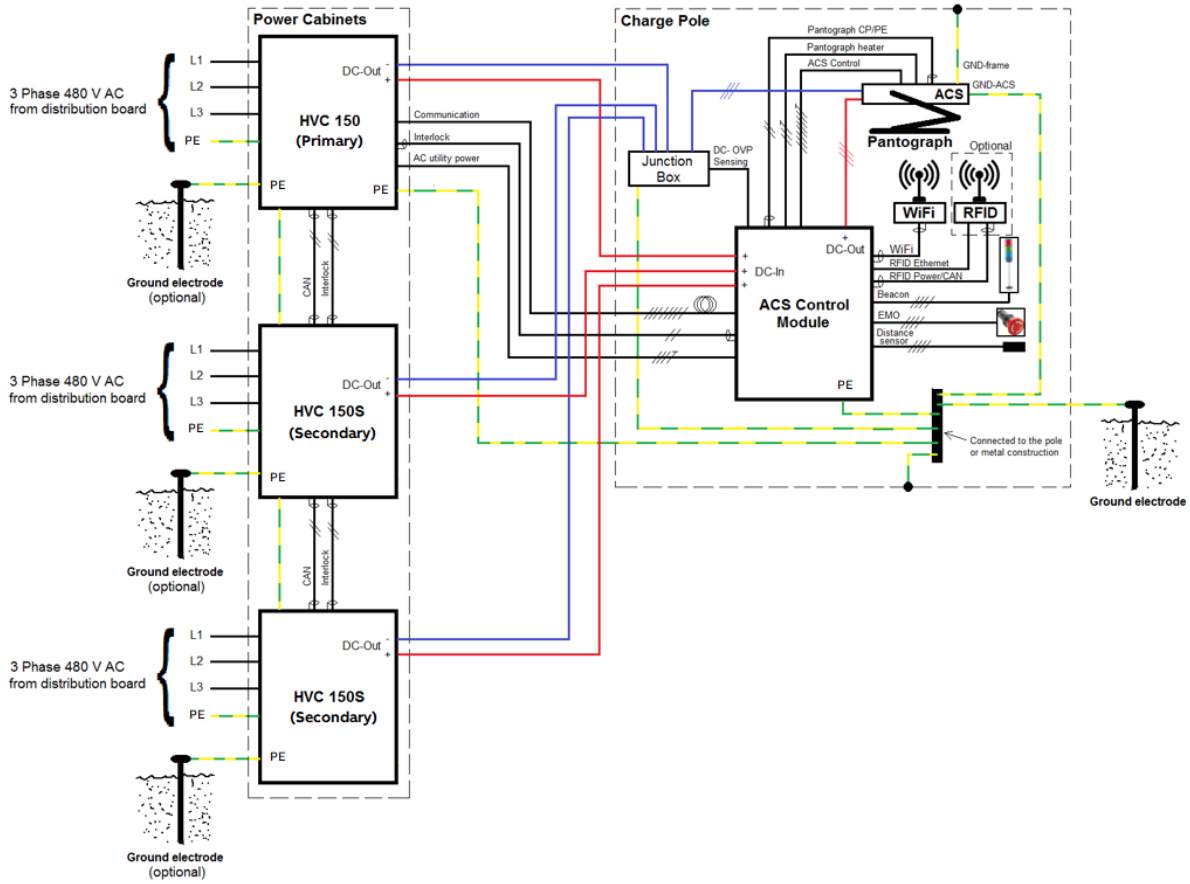

4.4.2. *Overview electrical connections of a HVC-PD 450 kW charge system*

Separated electrical diagrams for the different HVC-PD Charge systems are available:

- 6AGA000008-0614, Electrical diagram HVC-PD 150 kW Depot E-Bus Charger,

- 6AGA000008-0615, Electrical diagram HVC-PD 300 kW Depot E-Bus Charger,
- 6AGA000008-0616, Electrical diagram HVC-PD 450 kW Depot E-Bus Charger.

Contact ABB Sales department (see *Contact information* on Page 14 for contact details) to request the electrical diagrams.

4.4.3. AC power cable

For Power Cabinet:

- Cable type: 3P+PE (optional shielded).
- The cable shielding (if present) must be attached to the PE Rail at both ends of the cable.
- The cross section of the cable conductor must be determined by your contractor.
- The maximum cross section is 240 mm^2.
- The PE conductor of the power cable must have the same cross section as the phase conductors.

4.4.4. Cables between the Power Cabinets and the ACS Control Module

The following cables are not in the scope of supply of ABB.

- 2x, 4x or 6x DC power cables (depending on system configuration),
- 1x PE cable,
- 1x AC utility power cable,
- 1x Interlock cable,
- 4x communication cables; 8x glass fiber (4 fibers are required, 4 are for spare).
    - The 8x glass fiber cable is a special cable that should be sourced locally.

	NOTICE
	For detailed information about type of glass fiber cable which are needed, see *Communication glass fiber cable* on Page 21.

Use local regulations and datasheet of the manufacturer to determine the cable cross section for the DC power cables. Recommended minimum cable cross section is 185 mm^2 (with a reinforced isolation > 5400 V DC) for a distance until 150 m.

4.4.5. Cables between the Power Cabinets

The following cables are not in the scope of supply of ABB.

- 1x PE cable;
- 1x Interlock cable;
- 1x CAN cable.

4.4.6. Cables between the ACS Control Module and the Pantograph

	NOTICE

	The maximum length of the cables between the ACS Control Module and the Pantograph is 20 m. Take this into account when physically placing the ACS Control Module in relation to the pantograph.

The following cables are not in the scope of supply of ABB.

- 2x, 4x or 6x DC power cables (depending on system configuration),
- 1x Pantograph CP/PE cable,
- 1x Pantograph heater cable,
- 1x ACS control cable,
- 2x PE (connected to central PE-rail).

4.4.7. Cables between the ACS Control Module and other components

The following cables are not in the scope of supply of ABB.

- 1x WiFi cable (maximal cable length is 20 m),
- 1x Beacon cable,
- 1x EMO cable,
- 1x RFID Ethernet cable (optional, only needed when RFID unit is used),
- 1x RFID Power/CAN cable (optional, only needed when RFID unit is used).

4.4.8. Grounding of the Charge system

- PE must be connected to each of the Power Cabinets, the ACS Control Module, the Junction Box and the Pantograph by 35 mm^2 cable as described in the IEC 61851-23.
- Grounding scheme is dependent on layout of specific installation site and contracted electrical company should define detailed design of grounding installation. Local legal requirements must be followed.
- Use a central PE connection point (for example a 100 A PE- or earth-rail with minimum of six M8 bolt connections) for all of the PE wires, see section *Charge system configurations* on Page 47.
- For requirements for the lightning protection, see section *Lightning protection* on Page 39.

	NOTICE
	For the overview of the grounding of the system, see Appendix G *Ground overview of the system* on Page 143.

4.4.9. Cable specification list

Tables below provides general specifications for the needed cables. Use these tables to select cables, taking into account local installation conditions, cable length, cable temperature rating, losses and local regulations.

AC and DC power cables

Functional description	DC Power cable	PE cable	AC utility power cable	ACS heater cable
Number of cores	1	1	4	3
Cross section	185 – 300 mm^2	35 mm^2	2.5 mm^2	2.5 mm^2
Min – Max external diameter to fit through gland	19 – 28 mm	13 – 21 mm	5 – 10 mm	5 – 10 mm
Shielding	No	No	No	No
Conductor	Tinned copper or aluminum conductor, fine wire stranded acc. to VDE 0295 cl.5/IEC Cl.5	Fine strand copper wire acc. to VDE 0295 Cl. 5/ IEC 60228 Cl. 5	Bare copper, fine wired, bunch stranded acc. to VDE 0295 Cl.5/IEC Cl.5	Fine strand copper wire
Insulation	Special rubber or PVC (outdoor use, UV-protected, oil resistant)	Special PVC (outdoor use, UV-protected, oil resistant)	Special PVC (outdoor use, UV-protected, oil resistant)	PVC or other material that can be used outdoor and are UV-protected
Nominal Voltage Uo/U	600/1000 Vac 900/1500 Vdc	450/750 Vac	450/750 Vac	600/1000 Vac
Test Voltage	6 kV	4 kV	4 kV	2 kV
Ambient Temperature range	-40ºC to 80ºC, permissible conductor operating temperature +90°C	-40ºC to 70ºC	-40ºC to 80ºC	-40ºC to 80ºC
Core identification		gn/ye	Color Acc. to IEC 60446	Numbering
Remarks				The following connector parts are needed, see [1].

[1] 3x Harting female crimp Han C 2.5 mm2, 09 32 000 6205
1x Harting gland M20 Brass 6-12 mm, 19 00 000 5082
1x Harting Han M Hood top entry 2 M20, 19 37 003 1440
1x Harting Insert Han Q 2/0-f-crimp HV, 09 12 002 3152

Data cables

Functional description	Interlock cable	CAN cable	WiFi cable
Number of (twisted) pairs	2 x 2	1 x 2	1 x Coaxial
Cross section	0.75 – 2.5 mm^2	0.5 – 0.75 mm^2	
Min – Max external diameter to fit through gland	13 – 21 mm	*inapplicable*	*inapplicable*
Shielding	Yes (tinned copper braid)	Yes (tinned copper braid)	Yes (tinned copper braid)
Conductor	Fine strand copper wire	Fine strand copper wire	Fine strand or solid copper wire
Insulation	PVC or other material that can be used outdoor and are UV-protected	PVC or other material that can be used outdoor and are UV-protected	PVC or other material that can be used outdoor and are UV-protected
Characteristic impedance	120 Ω ± 10%	120 Ω ± 10%	50 Ω
Frequency range			0.3 GHz - 6 GHz
Test Voltage	1.5 kV	1.5 kV	
Ambient Temperature range	-40ºC to 70ºC	-40ºC to 70ºC	-40ºC to 80ºC
Core identification	Acc. to DIN 47100	Acc. to DIN 47100	Coaxial
Remarks			Including on both side N (male) connectors

Control cables

Functional description	DC- OVP Sensing cable	ASC control cable	ACS CP/PE cable	EMO cable	Beacon light cable
Number of cores	1	8	2	4	4
Twisted pair	No	No	No	No	No
Cross section	10 mm^2	2.5 mm^2	1.5 mm^2	0.5 – 0.75 mm^2	0.5 – 0.75 mm^2
Min – Max external diameter to fit through gland	13 – 21 mm	13 – 21 mm	5 – 10 mm	5 – 10 mm	5 – 10 mm
Shielding	No	No	Yes (tinned copper braid)	No	No
Conductor	Bare copper, fine wired, bunch stranded acc. to VDE 0295 Cl.5/IEC Cl.5	Fine strand copper wire	Fine strand copper wire	Fine strand copper wire	Fine strand copper wire
Insulation	Special rubber or PVC (outdoor use, UV-protected, oil resistant)	PVC or other material that can be used outdoor and are UV-protected	PVC or other material that can be used outdoor and are UV-protected	PVC or other material that can be used outdoor and are UV-protected	PVC or other material that can be used outdoor and are UV-protected
Test Voltage	6 kV	2 kV	2 kV – 4 kV	2 kV – 4 kV	2 kV – 4 kV
Nominal Voltage Uo/U	1.8/3 kVac	600/1000 Vac	300/500 Vac or 450/750 Vac	300/500 Vac or 450/750 Vac	300/500 Vac or 450/750 Vac
Ambient Temperature range	-40ºC to 80ºC	-40ºC to 80ºC	-40ºC to 80ºC	-40ºC to 80ºC	-40ºC to 80ºC
Core identification		Numbering	Numbering	Numbering or color	Numbering or color
Remarks	Included with the Junction Box. The cable may not be longer than 1 m.	The following connector parts are needed, see [1].			

[1] 7x Harting crimp socket Han D 2.5 mm^2, 09 15 000 6206
1x Harting Gland M20 Brass 10-14 mm, 19 00 000 5084
1x Harting Han M Hood Top Entry 2 M20, 19 37 003 1440
1x Harting Insert 12P Han-Q12-F-QL, 09 12 012 3101

- Important: when the cables are routed below ground, use cables that are suitable for underground installation, submerged in conduit.

- All cables must have and isolation that are self-extinguishing and flame retardant according to DIN VDE 0482-332-1-2, DIN EN 60332-1-2, IEC 60332-1-2.
- All cables must be corresponds to the VDE, CE and EAC Low Voltage Directive and must meet the RoHS compliance.
- The identity and/or function of the cable must be marked on every 2000 mm of the cable and on both ends.

4.5. Internet connection

In most cases the integrated 3G modem is used for wireless internet access. A customer SIM card is not required. If there is no 3G signal available, a standard wired internet connection is required. For this option, contact ABB Sales department (see *Contact information* on Page 14 for contact details).

5. Placement and Connection

5.1. About placement and connection

When the construction phase is finished, the HVC-PD Depot E-Bus Charger can be installed and connected.

5.2. Route the cables

1. Unpack the cables. See *Cabling* on Page 46 for details which cables must be used.

	NOTICE
	Step 2 and 3 are only applicable when the Power Cabinet is placed on a concrete foundation. The top cover plate is not needed any more after the cabinet is placed on the foundation.

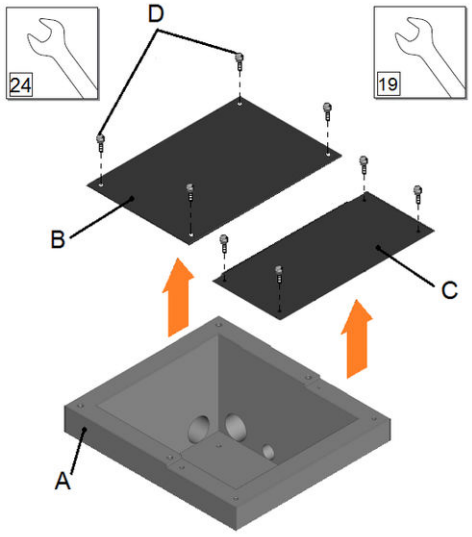

2. Remove the top cover plate (B) and the front cover plate (C) from the foundation (A) by loosen the bolts (D).
3. Put the front cover plate (C) and its bolts (D) in a safe location as it will be installed again later on.
4. Route the DC power cables through the cable conduit, duct or tray.
5. Route the AC utility power, PE wire and Interlock cable through the other cable conduit, duct or tray.
6. Route the communication glass fiber cable through the extra 40 mm cable conduit when using underground conduits.

	CAUTION
	To prevent damage to the glass fiber optic cable, a minimum of two persons is required to route the glass fiber cable through the conduit. One person for pulling, the other person to guide the glass fiber cable. Ensure that the glass fiber cable is carefully rolled out before it is pulled through the conduit, and do not use large traction forces, this can damage the glass fiber cable.

7. For the DC power cables, make sure that a cable length of 1000 mm is available above the surface for internal routing in the cabinet.
8. For the other cables, make sure that a cable length of 3000 mm is available above the surface for internal routing in the cabinet.

	NOTICE
	This extra cable length is required to connect the cables with the connectors in the Power Cabinet without problems.

5.3. Unpack Power Cabinet

5.3.1. Before unpacking

	NOTICE
	Unloading Power Cabinet The delivery truck only unloads the pallet carrying the Power Cabinet. The delivery truck will not move the Power Cabinet to its final location. The placement of the Power Cabinet to its final location is the responsibility of the contractor. Upon request it is possible to order a truck with a crane.
	CAUTION
	Do not pollute the environment with plastic and cardboard packing. Depollute these things according the regional applicable regulations as well as environment-friendly.

Preconditions:

- All construction work is completed.
- The product is delivered by a transport company at the confirmed date of delivery.

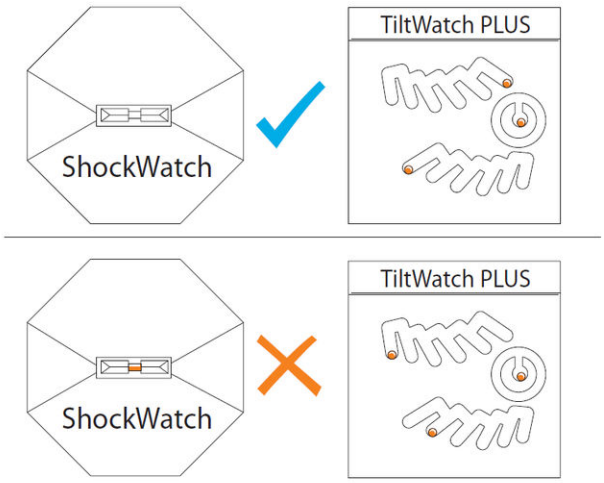

1. Make sure that the Power Cabinet has not been shaken or tilted over 30º.

5.3.2. Remove packaging

Preconditions

- Tools: spanner (size 24).

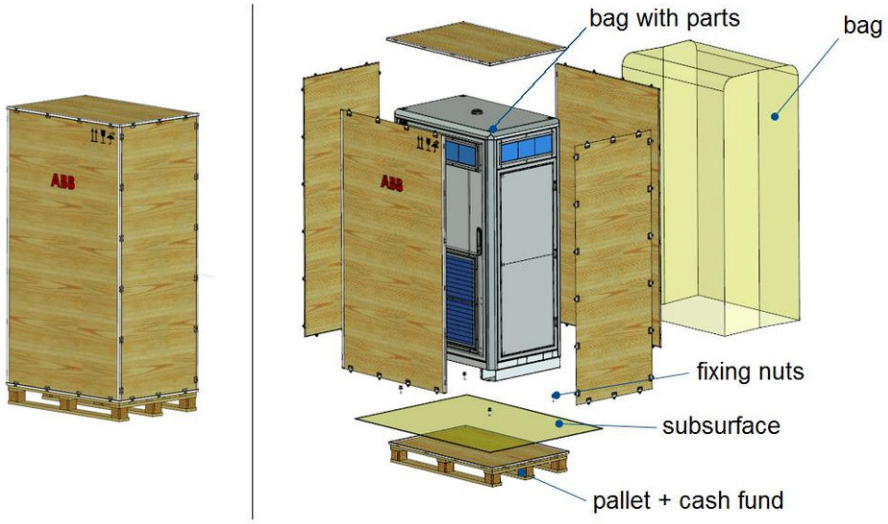

1. Remove the packaging material from the Power Cabinet.
2. Remove the bag which contain the keys, cover caps and mounting material that are attached with tape on one of the lifting eyebolt at the top of the cabinet.
3. Keep this bag with parts in a safe place.

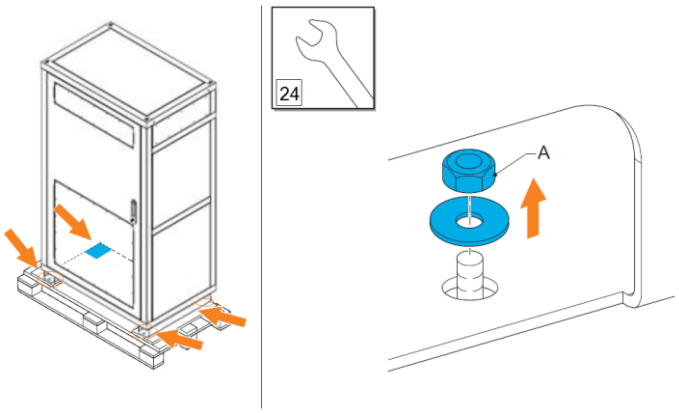

4. Remove the nuts (A) at the four corners.

5.4. Move Power Cabinet to position

There are two options to move the Power Cabinet from the delivery truck to the location.

- Use a hoist to lift the cabinet from the top. See *Move cabinet with a hoist* on Page 57.
- Use a forklift truck to lift the cabinet from the bottom. See *Move cabinet with a forklift truck* on Page 58.

Preconditions:

- All packaging material is removed from the Power Cabinet.
- The two cover plates are removed from the foundation.
- The tapped holes of the foundation are free from dust. If necessary, clean the holes with a vacuum cleaner. Use a thread tap to make sure that the bolts will go in smoothly.

	**DANGER** Make sure that the main switch of the power supply group for the product is set to the OFF position. Do a voltage check to make sure that the electrical power is disconnected from the system. Secure against resetting.
	**WARNING** Make sure that personnel cannot be crushed or become trapped while moving the Power Cabinet.
	**CAUTION** **Warranty** Damage due to moving the Power Cabinet to its position is not covered by the warranty.
	**CAUTION** Do not use a compressor to clean the Power Cabinet. Use a vacuum cleaner.

1. Use one of the two options to move the Power Cabinet to the foundation.
2. When the Power Cabinet is about 500 mm above its location, continue the installation procedure with *Install Power Cabinet onto the foundation* on Page 59.

5.4.1. Move cabinet with a hoist

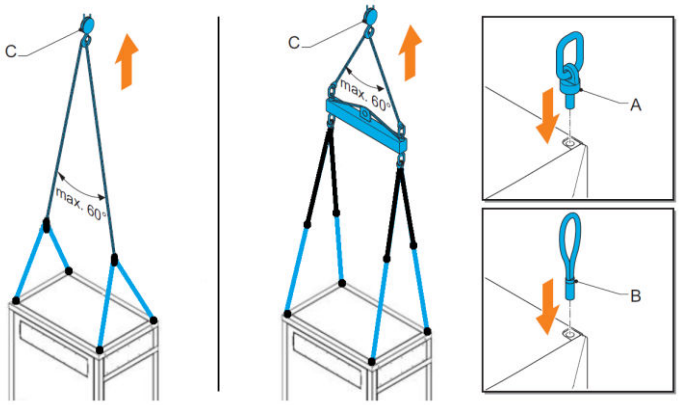

A Swivel eye bolts (standard delivered with the cabinet)
B Lifting loops
C Hoisting equipment

Preconditions:

- A minimum of two persons is required: one person to operate the hoisting equipment, the other person to guide the Power Cabinet to its location.
- Use M16 swivel eye bolts (A) or M16 bolts with lifting loops (B).

1. Insert the bolts (A) or (B) into the holes at the opposite corners of the cabinet, if not placed upon delivery.
2. Tighten the bolts.
3. Connect the hoisting equipment (C).

	**CAUTION**
	Keep the hoisting angle below 60º.

4. Move the Power Cabinet to the foundation.

5.4.2. Move cabinet with a forklift truck

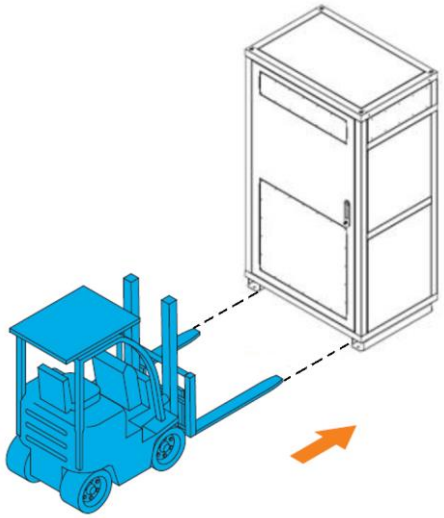

Preconditions:

- A minimum of two persons is required: one person to operate the forklift truck, the other person to guide the Power Cabinet to its location.

1. Place wooden slats with a thickness of about 10 to 15 mm and a width equal to the width of the fork of the forklift truck on both forks.
2. Move the forks of the forklift truck next the gaps at the rear of the Power Cabinet.
3. Move the Power Cabinet to the foundation.

	**NOTICE**
	The use of the fork slides is mandatory. The distance between the outer side of the forks need to be 930 mm, lifting the cabinet outside the fork slides is NOT allowed and will damage the cabinet.

5.5. Install Power Cabinet onto the foundation

5.5.1. Connect Power Cabinet to foundation

Preconditions:

- Tools: spanner (size 24).
- Cover caps (4x) that were removed from the Power Cabinet (bag with parts).
- The Power Cabinet is about 500 mm above its location.

	**DANGER** Make sure that the main switch of the power supply group for the product is set to the OFF position. Do a voltage check to make sure that the electrical power is disconnected from the system. Secure against resetting.
	**WARNING** Make sure that personnel cannot be crushed or become trapped while moving the Power Cabinet.

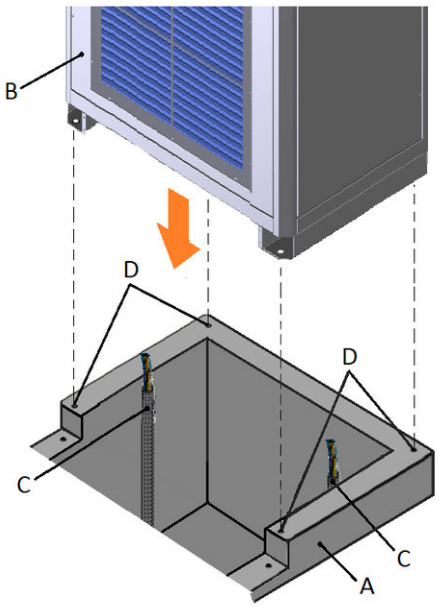

Placement on concrete foundation

A Foundation
B Power Cabinet
C Cables
D Tapped holes

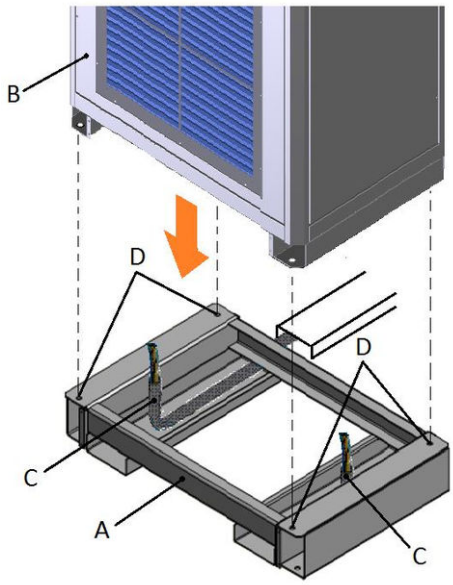

Placement on metal frame foundation

A Foundation
B Power Cabinet
C Cables
D Tapped holes

1. Carefully lower the Power Cabinet (B) onto the foundation (A).
2. Make sure that you do not trap the cables (C).
3. Make sure that the cabinet is aligned with the tapped holes (D).

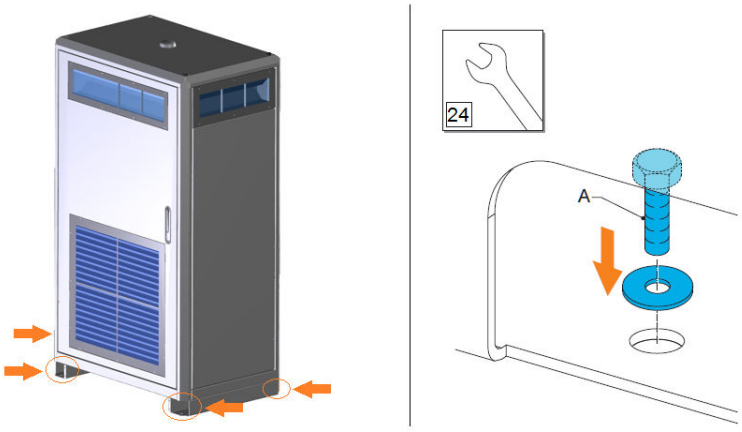

4. Insert the M16 bolts (A) fitted with the washers into the holes in the corners (4x).

	NOTICE
	A minimum of three M16 bolts are need to applied to securely mount the Power Cabinet onto the foundation. In case of placing two Power Cabinets next to each other and (100 mm distance) against the wall, then one Power Cabinet can be secured by three M16 bolts on to the foundation.

5. Tighten the bolts.

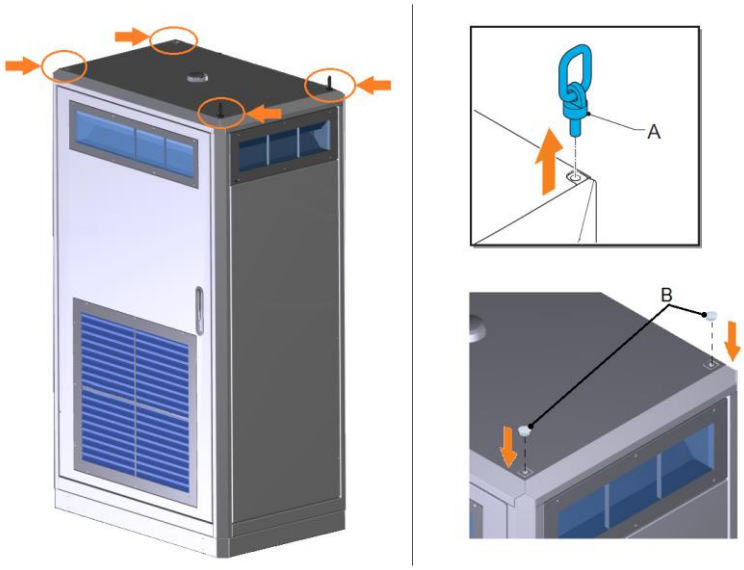

6. Remove the swivel eye bolts or lifting loops (A).
7. Place the cover caps (B) in the holes (4x).

5.5.2. Open the door of the Power Cabinet

Preconditions:

- Key that were removed from the Power Cabinet (bag with parts).

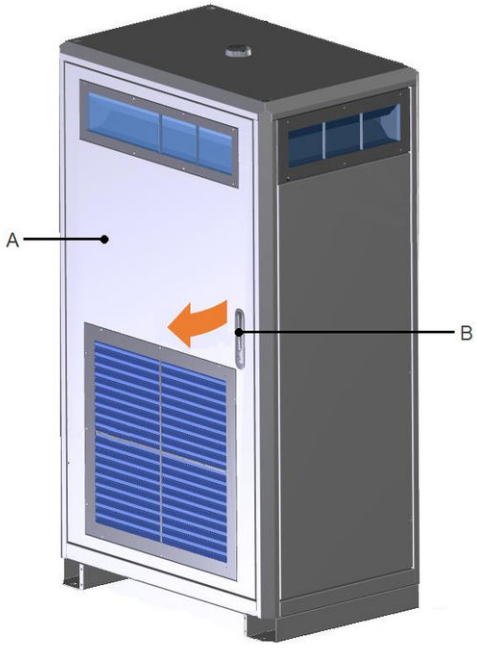

1. Unlock the handle (B)
2. Use the handle (B) to open the door (A).

5.5.3. Move the sliding plate of the guidance plates of the cabinet

Preconditions:

- Tools: spanner (size 13).

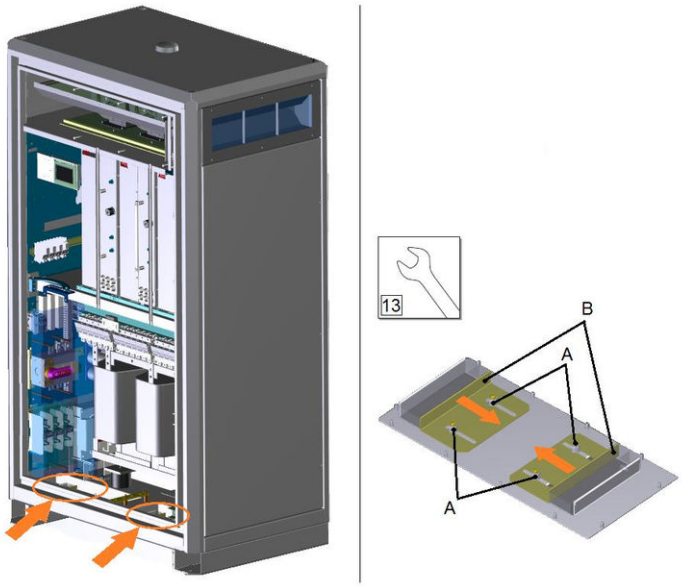

1. Loosen the bolts (A).
2. Move the sliding plate (B) of the 2 guidance plates.

5.5.4. Route cables through guidance plates

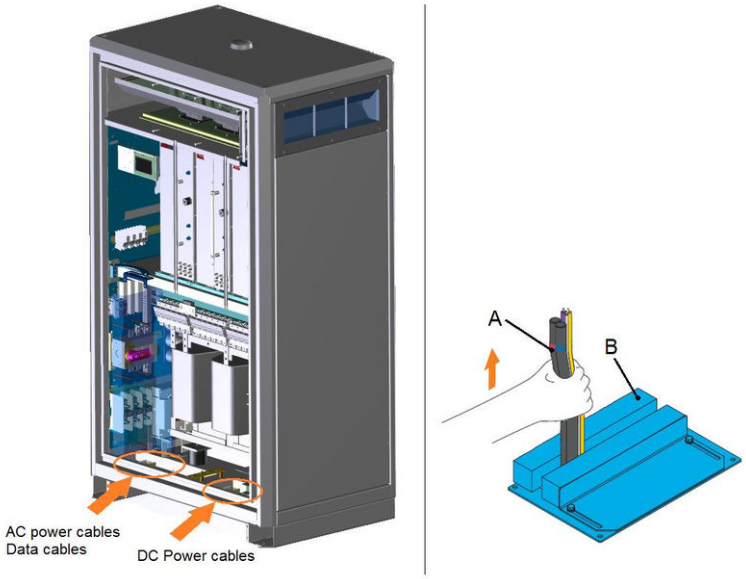

1. Route the cables (A) through the right guidance plates (B).
2. Make sure that there is sufficient cable length to reach the connectors at the top of the cabinet.

	NOTICE
	A length of 3000 mm is required, because the connection of the cables with the connectors in the Power Cabinet is at the middle of the cabinet.

5.5.5. Move sliding plates of the guidance plates of the cabinet

Preconditions:

- Tools: spanner (size 13).

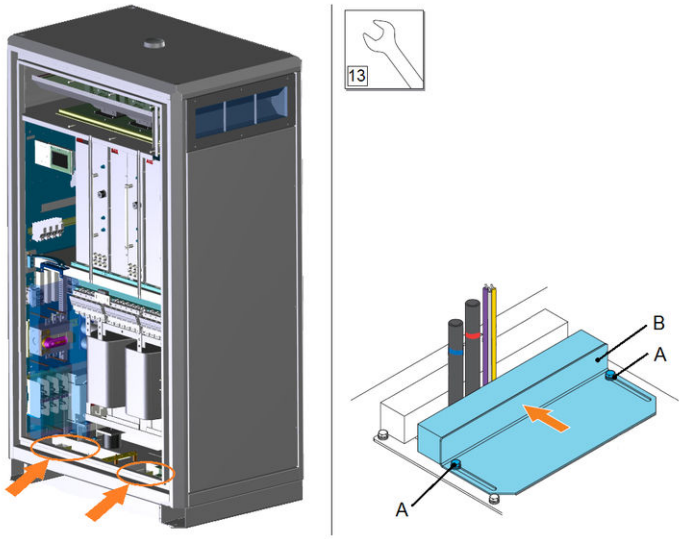

1. Move the sliding plates (B).
2. Tighten the bolts (A).

5.5.6. Install border covers of the Power Cabinet

Preconditions:

- Tools: torx screwdriver (size 2163TX-T30).
- M5 bolts (8x) that were removed from the Power Cabinet (bag with parts).

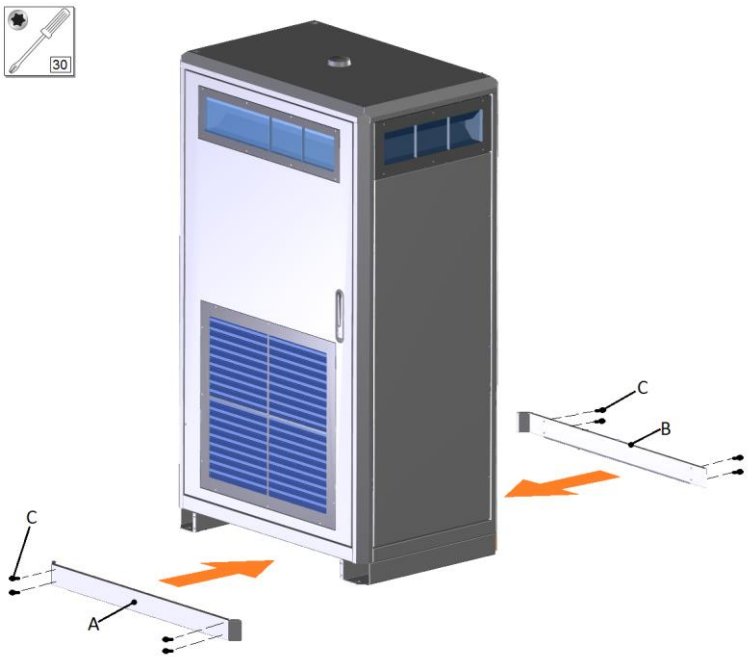

1. Put the front cover (A) against the bottom front of the Power Cabinet by aligning the four bolts at the back side of the front cover (A) with the holes in the bottom front.
2. Put the rear cover (B) against the rear front of the Power Cabinet.
3. Insert the M5 bolts (C) into the holes (8x).
4. Tighten the bolts.

5.5.7. Install border covers of metal frame foundation

	NOTICE
	Only applicable when the Power Cabinet is placed on a metal frame foundation. The supplied front and rear cover on the Power Cabinet are not used in this case.

Preconditions:

- Tools: torx screwdriver (size 2163TX-T30).

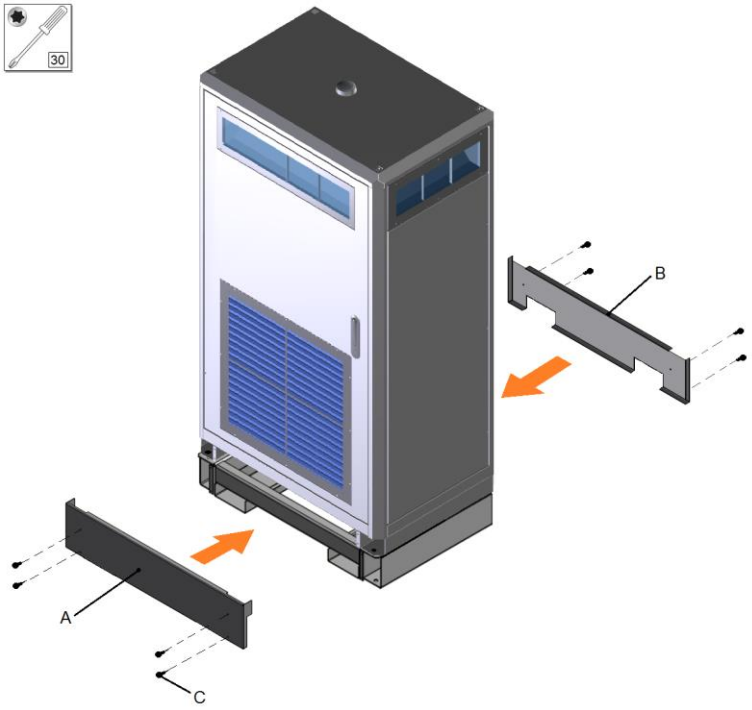

1. Put the front border cover (A) against the bottom front of the Power Cabinet.
2. Put the rear border cover (B) against the rear front of the Power Cabinet.
3. Insert the M5 bolts (C) into the holes (8x).
4. Tighten the bolts.

5.5.8. Install front cover plate on foundation

	NOTICE
	Only applicable when the Power Cabinet is placed on a concrete foundation.

Preconditions:

- Tools: spanner (size 19)

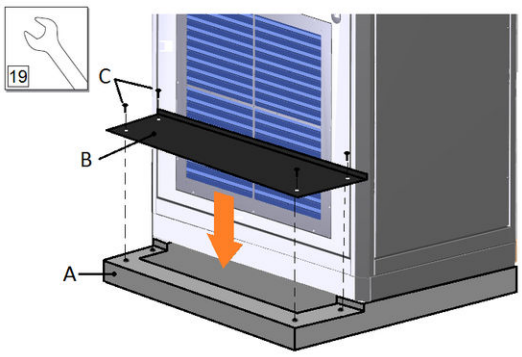

1. Place the front cover plate (B) on the foundation (A).
2. Make sure that the front cover plate (B) is aligned with the tapped holes within the foundation.

3. Insert the M12 bolts (C) into the holes (4x).
4. Tighten the bolts.

5.6. Connect AC power cable and PE wires Power Cabinets

5.6.1. Remove the protection covers

Preconditions:

- Tools: cross-head screwdriver

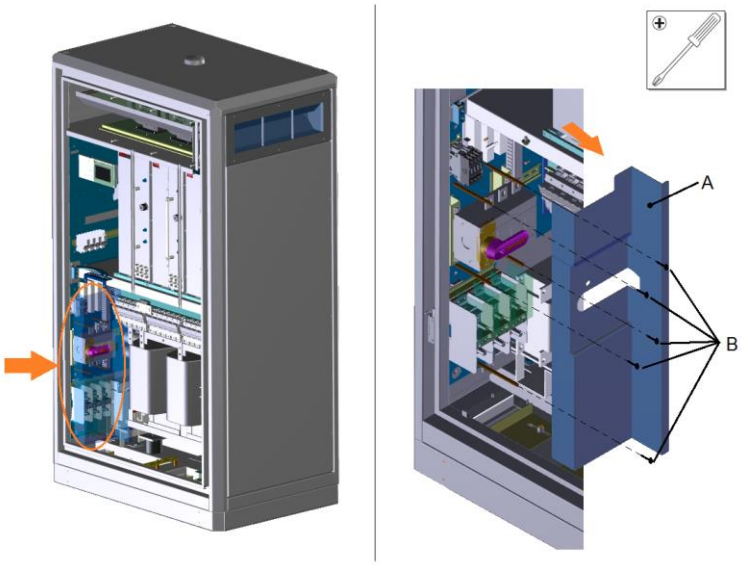

1. Remove the protection plate (A) by loosening the screws (B).
2. Put the protection plate and screws in a safe location as it will be installed again later on.

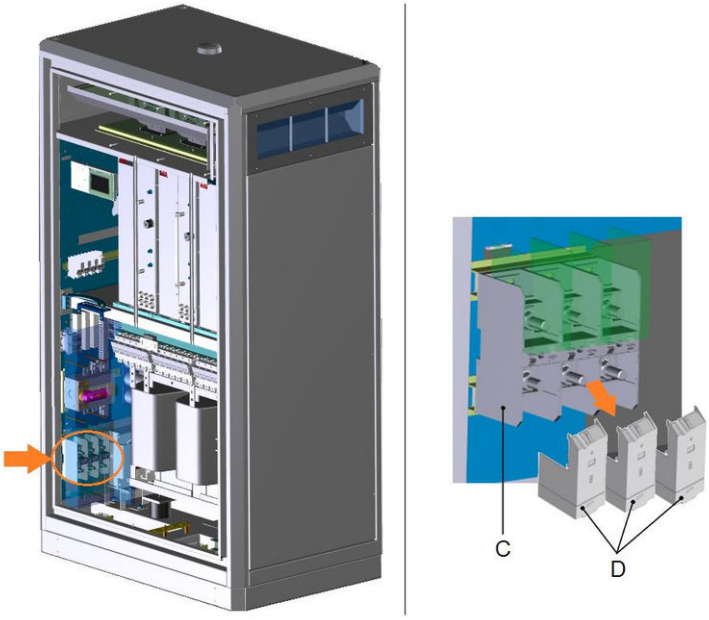

3. Remove the 3 protection covers (D) from the connector blocks (C).
4. Put the protection covers in a safe location as it will be installed again later on.

5.6.2. Connect the PE wire of the AC power cable

Preconditions:

- Parts (per cabinet): tubular cable lug (1x).
- Tools: wire cutter, wire stripper, crimp pliers, spanner (size 19), torque wrench (size 19).

	DANGER
	Make sure that the main switch of the power supply group for the product is set to the OFF position. Do a voltage check to make sure that the electrical power is disconnected from the system. Secure against resetting.

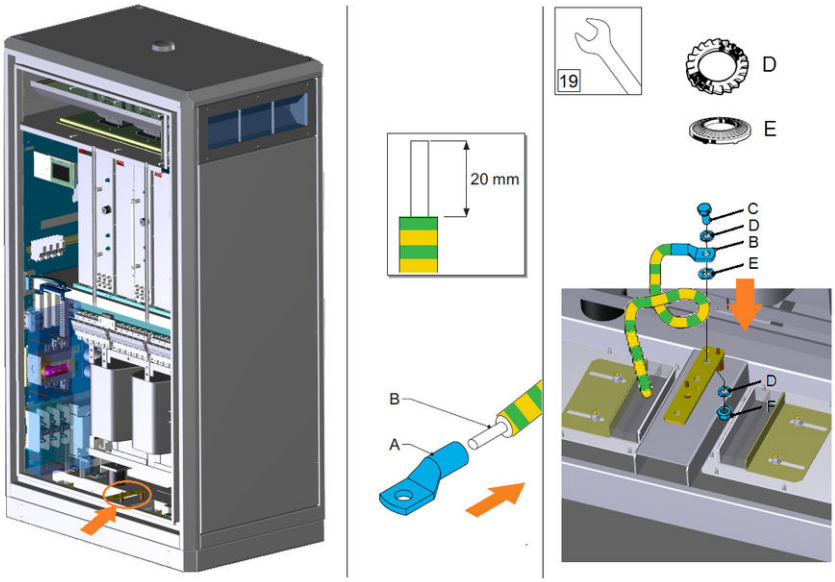

1. Make a loop in the PE wire.

	NOTICE
	For safety, it is recommended to make a loop in the PE wire so it is longer than the phase wires. This loop makes sure that the PE wire is not the first wire that is disconnected if the Power Cabinet is moved by a collision.

2. Cut the PE wire of the AC power cable to the correct length to reach the PE rail. Do not make the wire routing too tight, or too loose.
3. Strip 20 mm of the insulation from the end of the PE wire.
4. Attach a wire end ring (A) to the end of the PE wire (B).
5. Remove the M12 bolt, nut and washers from the PE rail.
6. Fit the bolt (C) with toothed washer (D), the PE wire (B) and the contact washer (E).
7. Insert the bolt fitted with the PE wire into the PE rail.
8. Screw from the bottom of the PE rail a toothed washer (D) and a nut (F) on the bolt (C)
9. Tighten the bolt/nut connection with a tightening torque of 30 N·m.

5.6.3. Connect the AC power cable

Preconditions:

- Parts (per cabinet): tubular cable lug (3x).
- Tools: wire cutter, wire stripper, crimp pliers, spanner (size 19), torque wrench (size 19).

	DANGER
	Make sure that the main switch of the power supply group for the product is set to the OFF position. Do a voltage check to make sure that the electrical power is disconnected from the system. Secure against resetting.

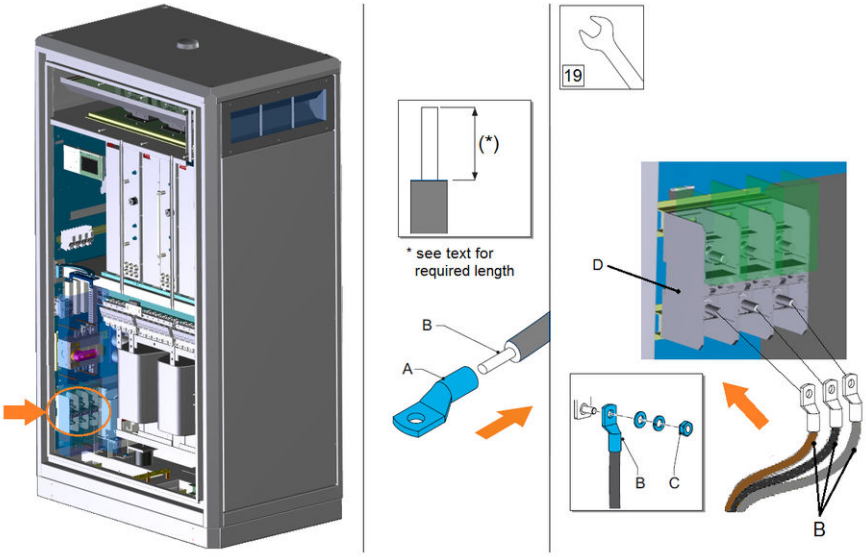

1. Cut the wires of the AC power cable to the correct lengths to reach the connectors. Do not make the wire routing too tight, or too loose.
2. Strip the insulation on the required length specified by the used lug from the end of the wire (B).
3. Attach cable lugs (A) at the end of the wires.
4. Remove the nuts and washers (C) from the bolts (M12) of connector block (D).
5. Insert the 3 wires (B) with the nuts and washers onto the bolts of connector block (D).
   • From left to right:
   L1 (brown),
   L2 (black),
   L3 (grey or black).
6. Tighten the nuts (C) with a tightening torque of 30 N·m.

5.6.4. Install the protection covers

Preconditions:

- Tools: cross-head screwdriver

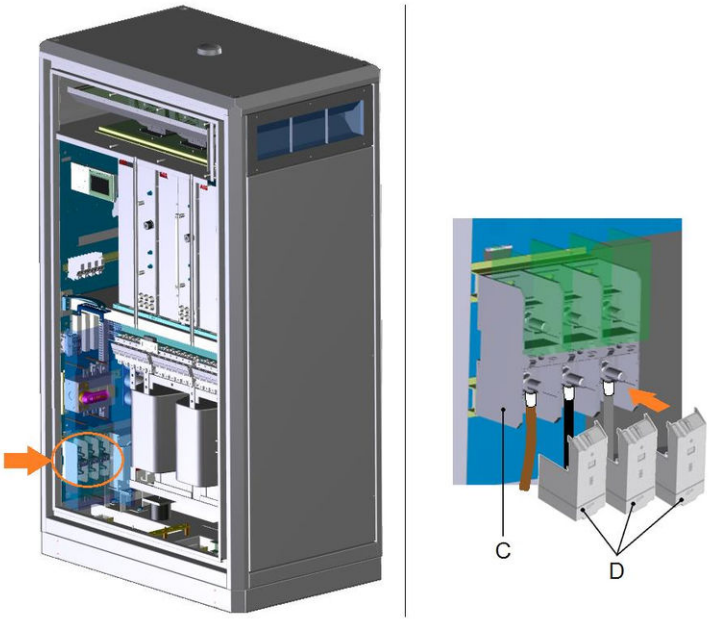

1. Take the 3 protection covers that was removed in *Remove the protection covers* on Page 66.
2. Place the protection covers (D) back on the connector blocks (C).

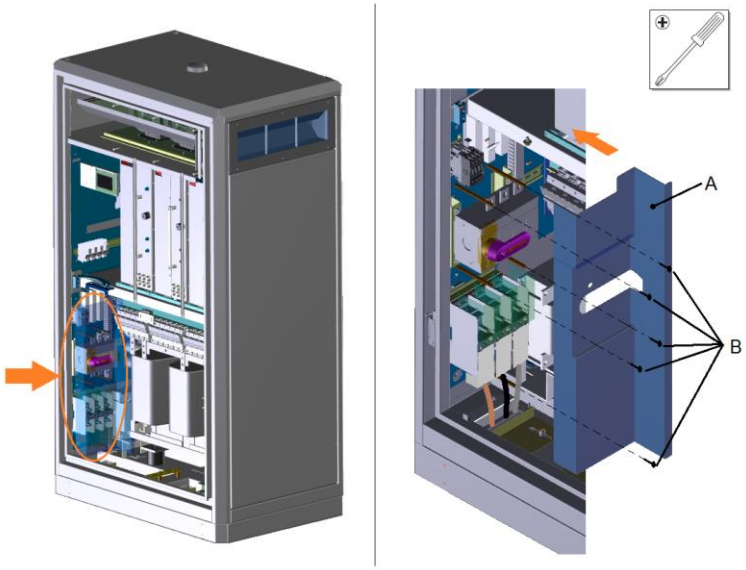

3. Take the protection plate and the screws that were removed in *Remove the protection covers* on Page 66.
4. Place the protection plate (A) back over the main switch and connector blocks and secure the plate by the screws (B).

	WARNING
	Leave the main switch switched off. The Power Cabinet is not ready for use yet. If there is no appointment for commissioning yet, contact the ABB Delivery department to make an appointment for commissioning. See ***Error! Reference source not found.*** on Page **Error! Bookmark not defined.** for contact details.

5.6.5. Install lightning protection (optional)

Preconditions:

- Parts (per cabinet): 50/M12 tubular cable lug (1x).
- Tools: wire cutter, wire stripper, crimp pliers, spanner (size 19), torque wrench (size 19).

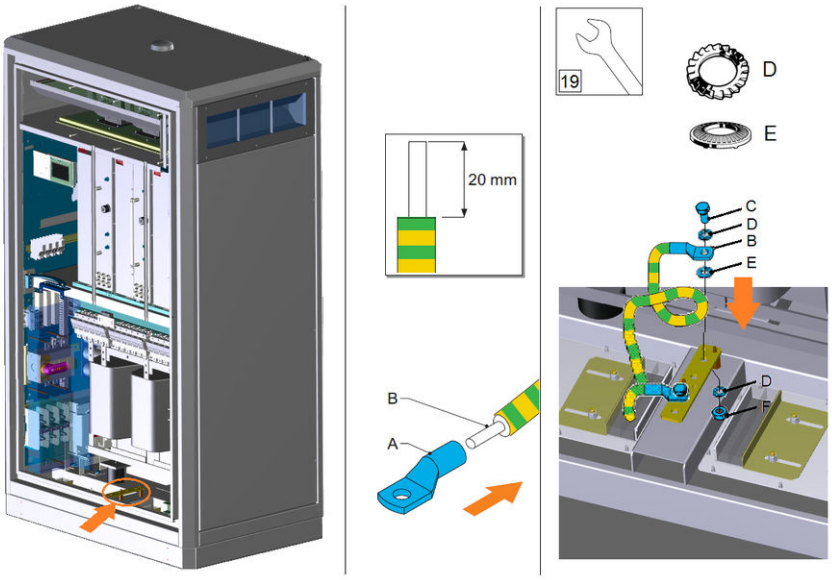

1. Cut the wire of the lightning protection cable to the correct length to reach the PE rail. Do not make the wire routing too tight, or too loose.
2. Strip 20 mm of the insulation from the end of the wire.
3. Attach a wire end ring (A) to the end of the lightning protection wire (B).
4. Remove the M12 bolt, nut and washers from the PE rail.
5. Fit the bolt (C) with toothed washer (D), the lightning protection wire (B) and the contact washer (E).
6. Insert the bolt fitted with washers and the lightning protection wire into the PE rail.
7. Screw from the bottom of the PE rail a toothed washer (D) and a nut (F) on the bolt (C)
8. Tighten the bolt/nut connection with a tightening torque of 30 N·m.

5.6.6. Connect the PE wire to the Charge Pole

	NOTICE
	The PE wire to the Charge Pole is only connected within the HVC 150 Power Cabinet, see for more details section *Cabling* on Page 46.

Preconditions:

- Parts (per cabinet): 35/M12 tubular cable lug (1x).
- Tools: wire cutter, wire stripper, crimp pliers, spanner (size 19), torque wrench (size 19).

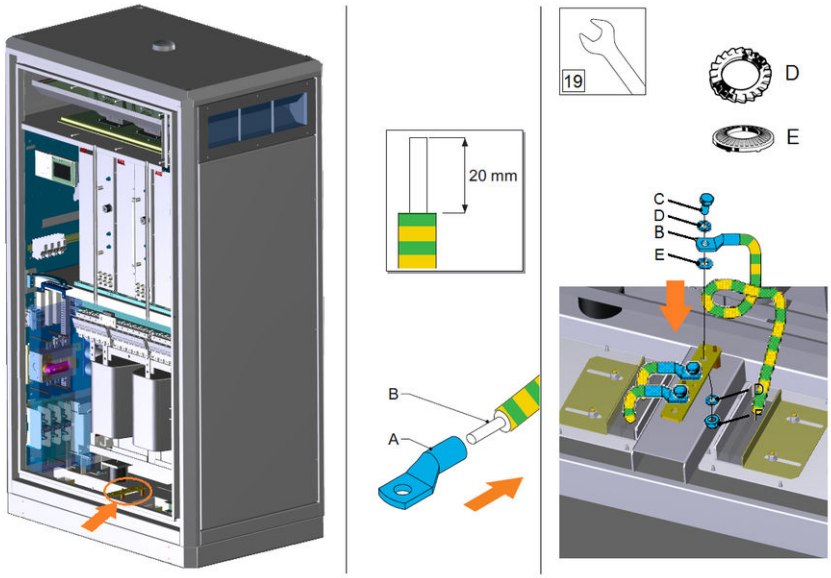

1. Cut the PE wire of the power cable to the correct length to reach the PE rail. Do not make the wire routing too tight, or too loose.
2. Strip 20 mm of the insulation from the end of the PE wire.
3. Attach a wire end ring (A) to the end of the PE wire (B).
4. Remove the M12 bolt, nut and washers from the PE rail.
5. Fit the bolt (C) with toothed washer (D), the PE wire (B) and the contact washer (E).
6. Insert the bolt fitted with the PE wire into the PE rail.
7. Screw from the bottom of the PE rail a toothed washer (D) and a nut (F) on the bolt (C)
8. Tighten the bolt/nut connection with a tightening torque of 30 N·m.

5.6.7. Connect the PE wire between the Power Cabinets

Preconditions:

- Parts (per cabinet): 35/M12 tubular cable lug (1x).
- Tools: wire cutter, wire stripper, crimp pliers, spanner (size 19), torque wrench (size 19).

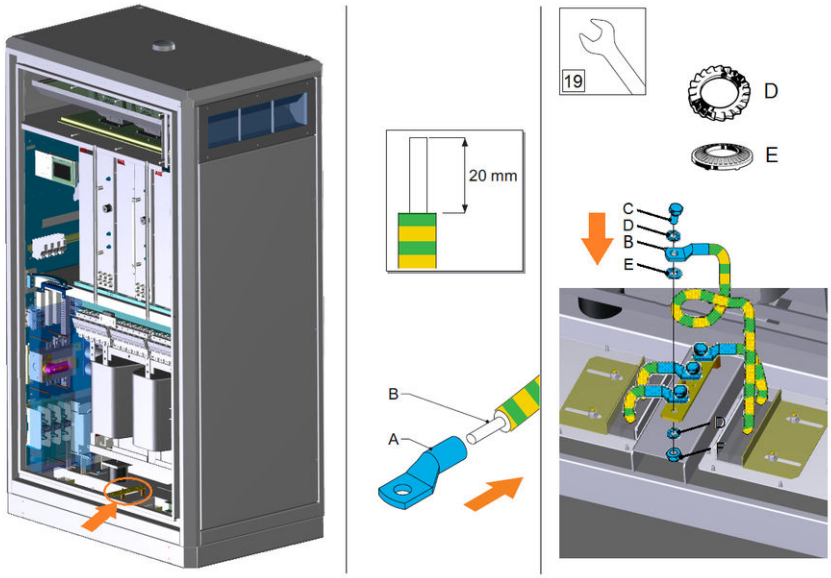

Both PE wire connection must be made between the HVC 150 and the first HVC 150S and between both HVC 150S, see also section *Cabling* on Page 46:

1. Cut the PE wire of the power cable to the correct length to reach the PE rail. Do not make the wire routing too tight, or too loose.
2. Strip 20 mm of the insulation from the end of the PE wire.
3. Attach a wire end ring (A) to the end of the PE wire (B).
4. Remove the M12 bolt, nut and washers from the PE rail.
5. Fit the bolt (C) with toothed washer (D), the PE wire (B) and the contact washer (E).
6. Insert the bolt fitted with the PE wire into the PE rail.
7. Screw from the bottom of the PE rail a toothed washer (D) and a nut (F) on the bolt (C)
8. Tighten the bolt/nut connection with a tightening torque of 30 N·m.

5.7. Connect the DC power cables Power Cabinets

Preconditions:

- Parts (per cabinet): 185/M12 tubular cable lug (2x), heat-shrink red 2:1 Ø 25.4 mm, heat-shrink black 2:1 Ø 25.4 mm.
- Tools: wire cutter, wire stripper, crimp pliers, spanner (size 19), torque wrench (size 19), cross-head screwdriver.

	DANGER
	Make sure that the main switch of the power supply group for the product is set to the OFF position. Do a voltage check to make sure that the electrical power is disconnected from the system. Secure against resetting.

5.7.1. Remove the protection cover

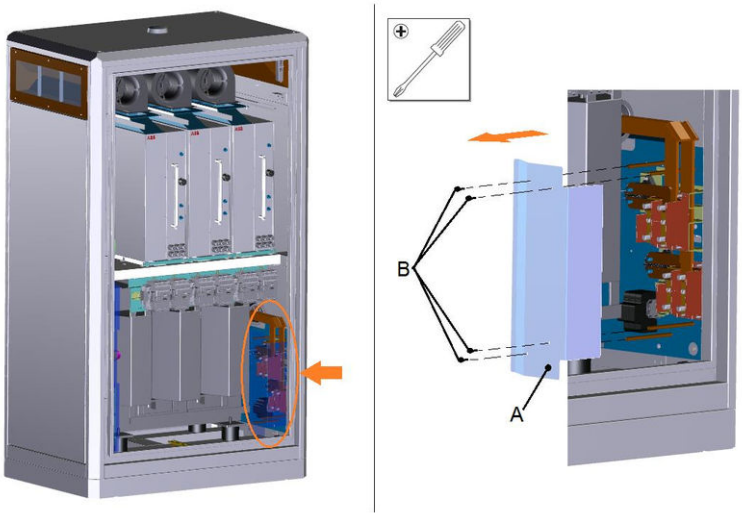

1. Remove the protection plate (A) by loosening the screws (B) (4x).
2. Put the protection plate and screws in a safe location as it will be installed again later on.

5.7.2. Connect the DC power cables

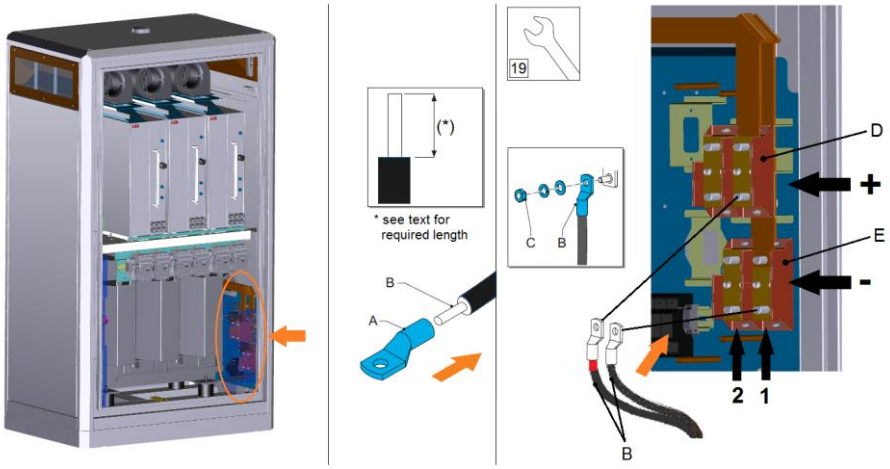

1. Cut the wires of the DC power cable to the correct lengths to reach the connectors. Do not make the wire routing too tight, or too loose.
2. Place 80 mm long heat-shrink (red on DC+ and black on DC- power cables).
3. Strip the insulation on the required length specified by the used lug from the end of the wire (B).
4. Attach cable lug (A) at the end of the wires and use the heat-shrink to cover the crimp connection.
5. Remove the nuts and washers (C) from the bolts (M12) of connector block (D) and (E).
6. Insert the DC+ wire (marked by red heat-shrink) with the nuts and washers onto the bolts of pin 1 of the connector block (D).
7. Insert the DC- wire with the nuts and washers onto the bolts of pin 1 of the connector block (E).
8. Tighten the nuts (C) with a tightening torque of 30 N·m.

5.7.3. Install the protection cover

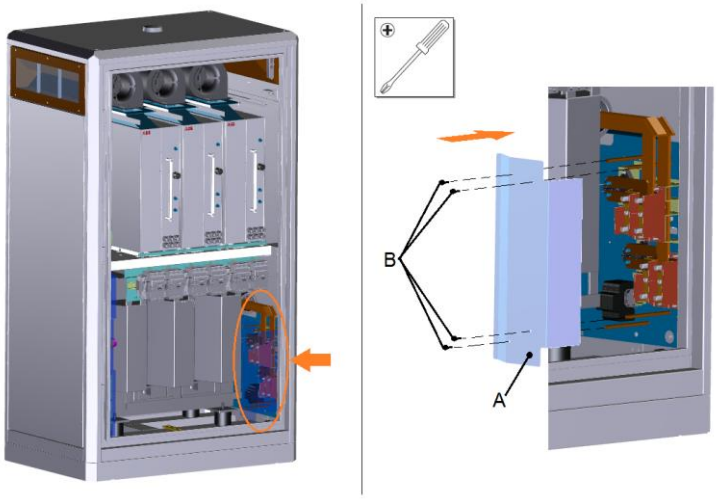

1. Take the protection plate that was removed in *Remove the protection cover* on Page 73.
2. Place the protection plate (A) back over the DC connector blocks and secure the plate by the screws (B) (4x).

5.8. Connect AC utility power, Interlock and CAN cables Power Cabinet

Preconditions:

- Parts: 0.5 x 8 ferrule, 1.5 x 8 ferrule, 2.5 x 8 ferrule.
- Tools: wire cutter, wire stripper, screwdriver, ferrules, crimp pliers.

	DANGER
	Make sure that the main switch of the power supply group for the product is set to the OFF position. Do a voltage check to make sure that the electrical power is disconnected from the system. Secure against resetting.

5.8.1. Route the cables to the terminal blocks

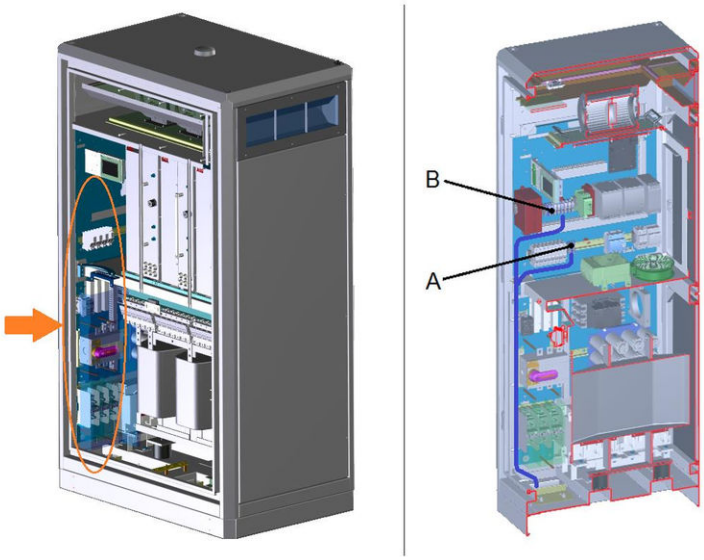

Preferred cable route

1. Route the AC utility cable to the terminal block (A). Refer to the figure for the preferred cable route inside the cabinet (only within the HVC 150).
2. Route the Interlock cable(s) to the terminal block (B). Refer to the figure for the preferred cable route inside the cabinet.
3. Route the CAN cable to the terminal block (B). Refer to the figure for the preferred cable route inside the cabinet.

5.8.2. Connect the AC utility power cable

	NOTICE
	The AC utility power cable for the ACS Control Module is only connected within the HVC 150 Power Cabinet, see for more details section *Cabling* on Page 46.

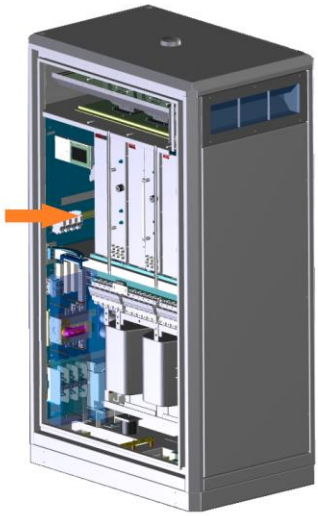

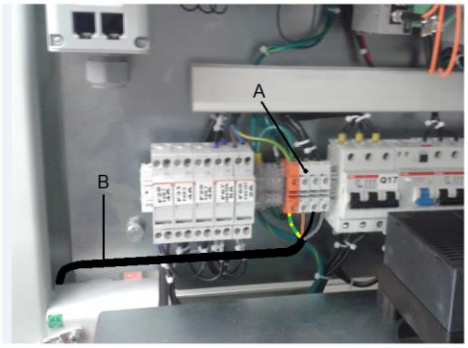

A Terminal block
B AC utility power cable

1. Move the cable towards the terminal block (A).
2. Strip 11 mm of the insulation from the ends of the wires.
3. Crimp a ferrule onto the end of the wire.
4. Loosen the connector screws.
5. Insert the wires into the connectors, see table below:

Functional description	Connector	Wire color
PE	X341-1	Green/yellow
L1	X341-2	Brown
L2	X341-3	Black
L3	X341-4	Gray

6. Tighten the connector screws with a tightening torque of 1.3 N·m.

5.8.3. Connect the Interlock cable for the HVC 150 kW system

Interlock cable connection in the **primary HVC 150**:

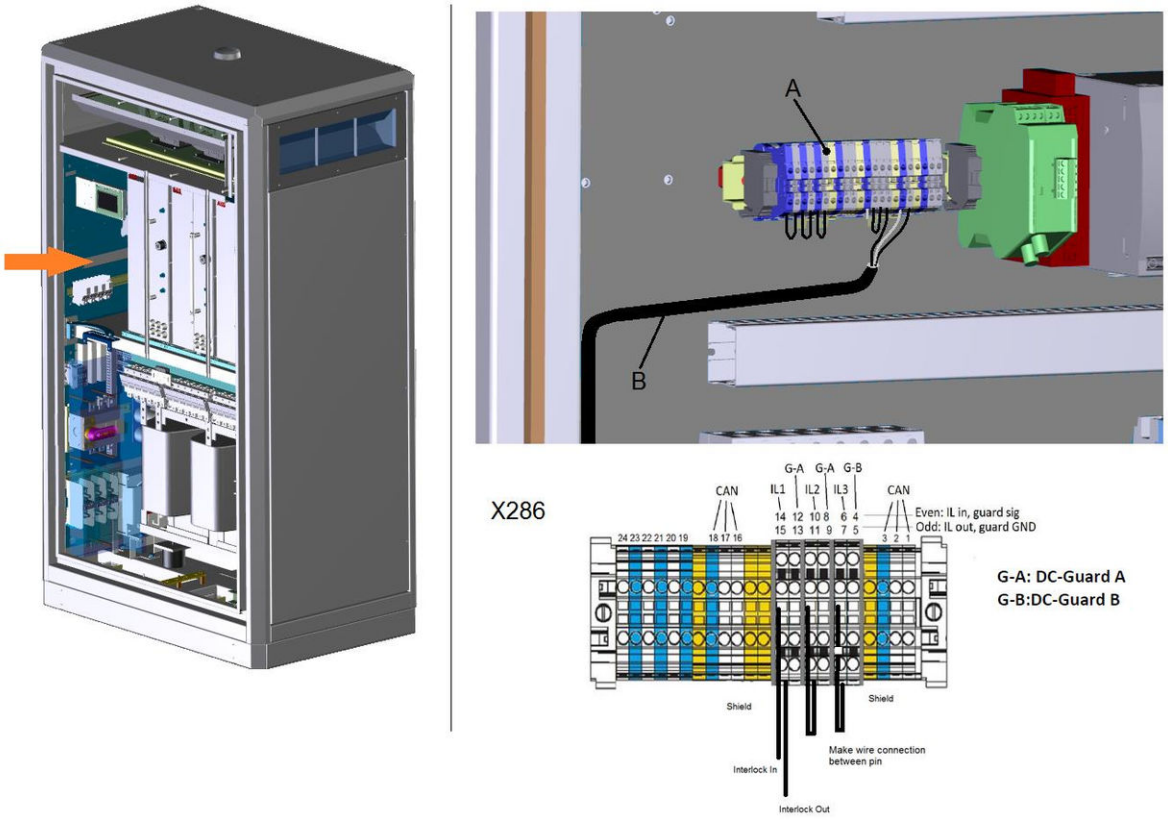

A Terminal block
B Interlock cable from/to ACS Control Module (ACM)

1. Move the cable towards the terminal block (A).
2. Strip 0.43 Inch of the insulation from the ends of **only the White and Brown wire!**
3. Crimp a ferrule onto the end of the White and Brown wire.
4. Ensure that the unused wires, the Green and Yellow wire, are protected so that they cannot touch metal parts.
5. Make a wire connection between pin X286-6 and X286-7 and pin X286-10 and X286-11.
6. Loosen the connector screws.
7. Insert the wires into the connectors, see table below:

Functional description	Connector	Wire number
Interlock In	X286-15	Brown
Interlock Out	X286-14	White
Interlock GND	X286	Shield
Interlock loop	X286-6	Black
Interlock loop	X286-7	Black
Interlock loop	X286-10	Black
Interlock loop	X286-11	Black

See also Appendix H *Signal connection diagram*.

8. Tighten the connector screws with a tightening torque of 1.3 N·m.

5.8.4. Upgrade the Interlock connection to the HVC 300 kW system

Interlock cable connection in the **primary HVC 150**:

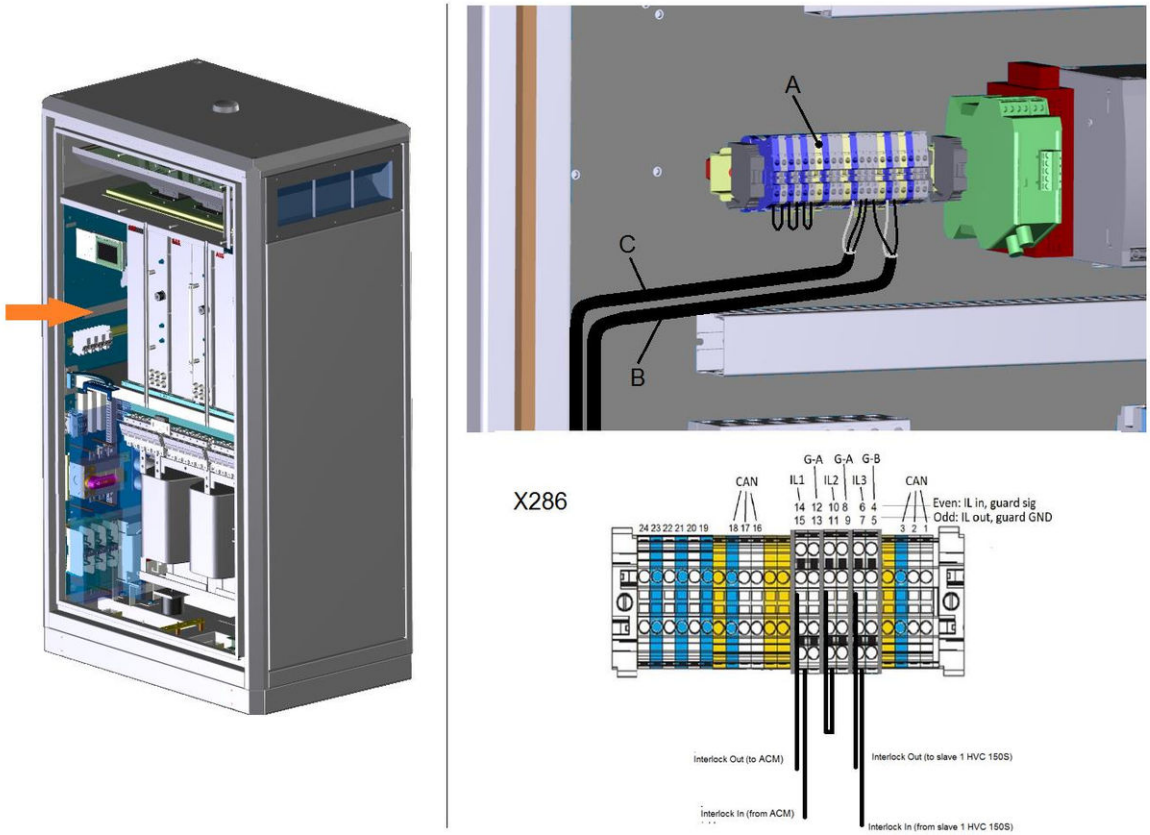

A Terminal block
B Interlock cable from/to ACS Control Module (ACM)
C Interlock cable from/to secondary 1 HVC 150S

1. Move the cables towards the terminal block (A).
2. Strip 0.43 Inch of the insulation from the ends of **only the White and Brown wire!**
3. Crimp a ferrule onto the end of the White and Brown wire.
4. Ensure that the unused wires, the Green and Yellow wire, are protected so that they cannot touch metal parts.
5. Loosen the connector screws.
6. Remove the wire connection between pin X286-6 and X286-7, if present.
7. Insert the wires into the connectors, see table below:

Functional description	Connector	Wire number
Interlock In (ACM)	X286-15	Brown
Interlock Out (ACM)	X286-14	White
Interlock GND (ACM)	X286	Shield
Interlock In (secondary 1 HVC 150S)	X286-6	White
Interlock Out (secondary 1 HVC 150S)	X286-7	Brown
Interlock GND (secondary 1 HVC 150S)	X286	Shield
Interlock loop	X286-10	Black
Interlock loop	X286-11	Black

See also Appendix H *Signal connection diagram*8. Tighten the connector screws with a tightening torque of 1.3 N·m.

Interlock cable connection in **secondary 1 HVC 150S**:

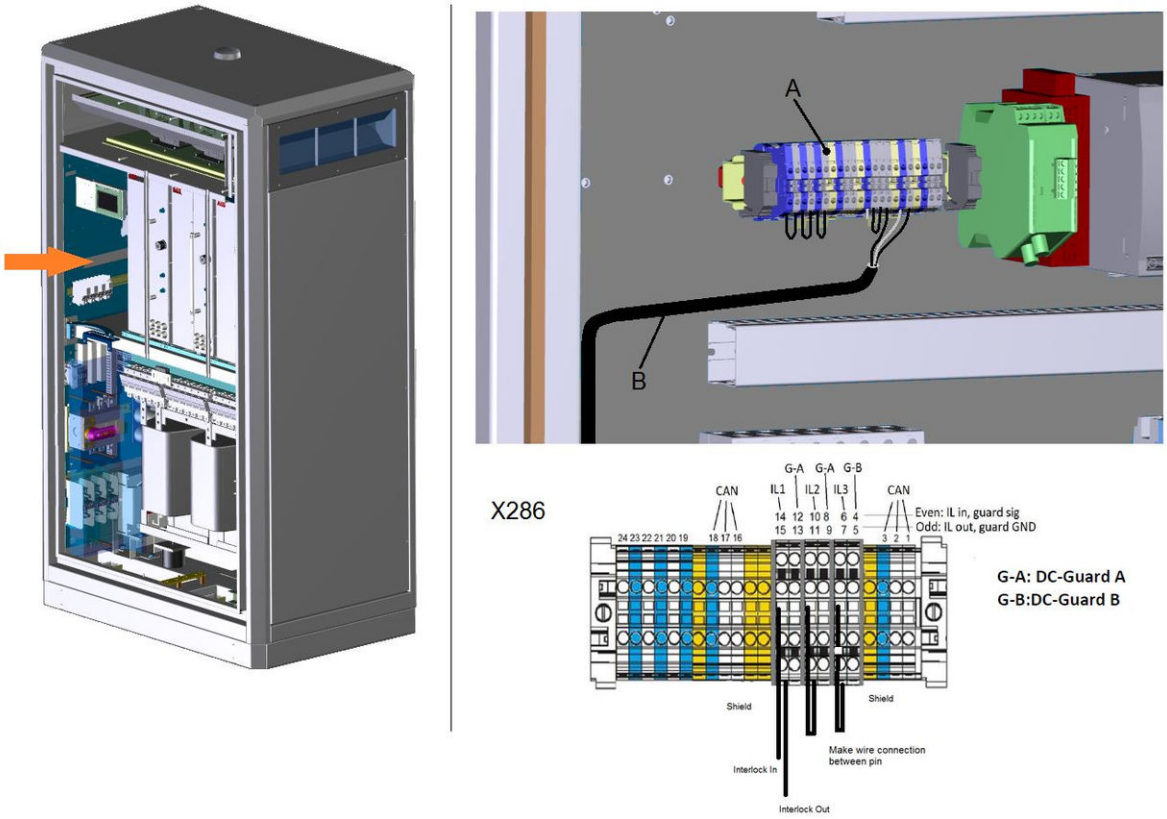

A Terminal block
B Interlock cable from/to primary HVC 150

1. Move the cables towards the terminal block (A).
2. Strip 0.43 inch of the insulation from the ends of **only the White and Brown wire!**
3. Crimp a ferrule onto the end of the White and Brown wire.
4. Ensure that the unused wires, the Green and Yellow wire, are protected so that they cannot touch metal parts.
5. Make a wire connection between pin X286-6 and X286-7 and pin X286-10 and X286-11.
6. Loosen the connector screws.
7. Insert the wires into the connectors, see table below:

Functional description	Connector	Wire number
Interlock In (primary HVC 150)	X286-14	Brown
Interlock Out (primary HVC 150)	X286-15	White
Interlock GND (primary HVC 150)	X286	Shield
Interlock loop	X286-6	Black
Interlock loop	X286-7	Black
Interlock loop	X286-10	Black
Interlock loop	X286-11	Black

See also Appendix H *Signal connection diagram*.

8. Tighten the connector screws with a tightening torque of 1.3 N·m.

5.8.5. Upgrade the Interlock connection to the HVC 450 kW system

Interlock cable connection in **secondary 1 HVC 150S**:

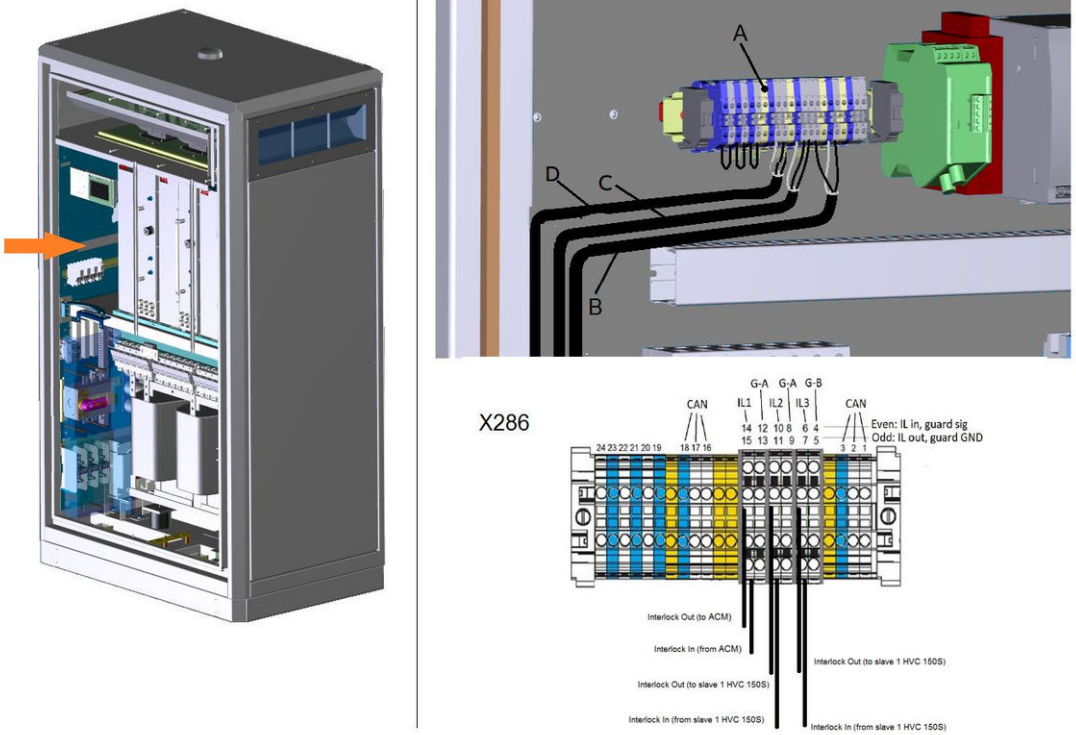

A Terminal block
B Interlock cable from/to primary HVC 150
C Interlock cable from/to secondary HVC 150S
D Interlock cable from/to secondary HVC 150S

1. Move the cables towards the terminal block (A).
2. Strip 0.43 Inch of the insulation from the ends of **only the White and Brown wire!**
3. Crimp a ferrule onto the end of the White and Brown wire.
4. Ensure that the unused wires, the Green and Yellow wire, are protected so that they cannot touch metal parts.
5. Loosen the connector screws.
6. Remove the wire connection between pin X286-6 and X286-7 and pin X286-10 and X286-11, if present.
7. Insert the wires into the connectors, see table below:

Functional description	Connector	Wire number
Interlock In (ACM)	X286-15	Brown
Interlock Out (ACM)	X286-14	White
Interlock GND (ACM)	X286	Shield
Interlock In (secondary 1 HVC 150S)	X286-6	White
Interlock Out (secondary 1 HVC 150S)	X286-7	Brown
Interlock GND (secondary 1 HVC 150S)	X286	Shield
Interlock Out (secondary 1 HVC 150S)	X286-10	Black
Interlock GND (secondary 1 HVC 150S)	X286-11	Black

See also Appendix H *Signal connection diagram*.

8. Tighten the connector screws with a tightening torque of 1.3 N·m.

Interlock cable connection in **secondary 2 HVC 150S**:

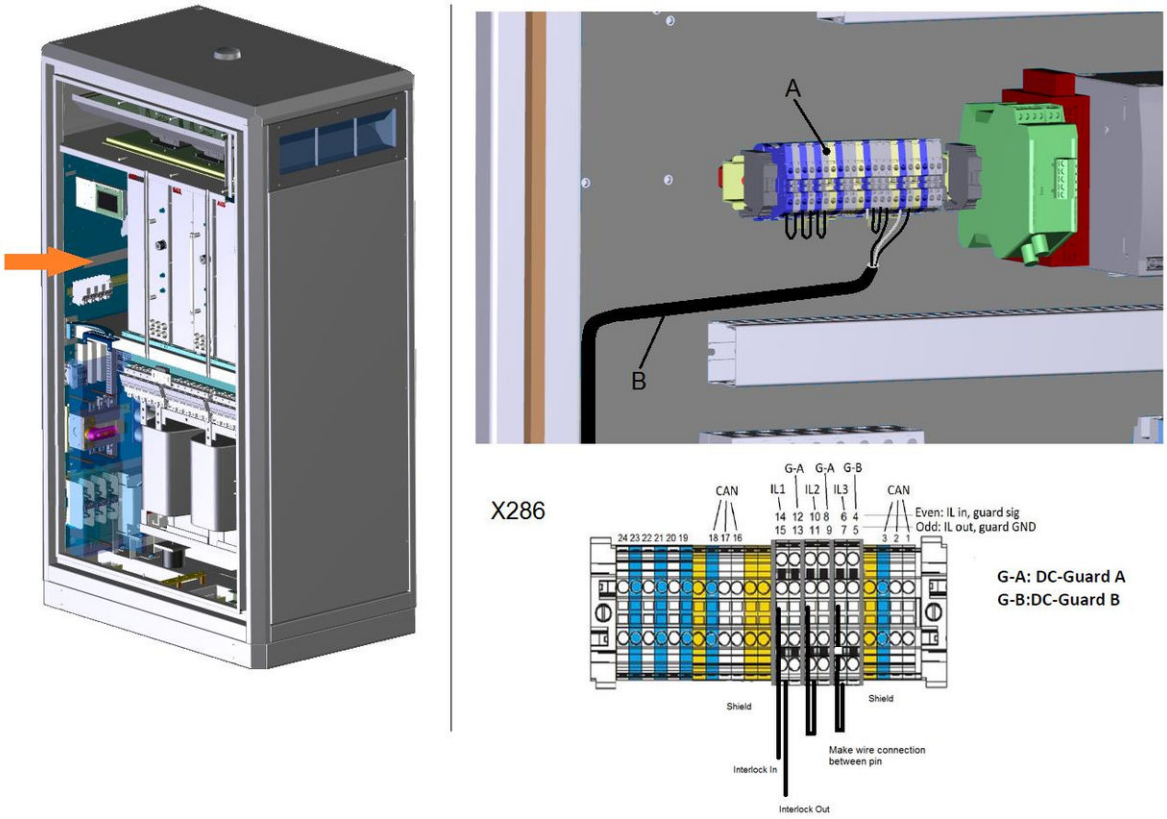

A Terminal block
B Interlock cable from/to secondary 1 HVC 150S

1. Move the cables towards the terminal block (A).
2. Strip 0.43 Inch of the insulation from the ends of **only the White and Brown wire!**
3. Crimp a ferrule onto the end of the White and Brown wire.
4. Ensure that the unused wires, the Green and Yellow wire, are protected so that they cannot touch metal parts.
5. Make a wire connection between pin X286-7 and X286-8.
6. Loosen the connector screws.
7. Insert the wires into the connectors, see table below:

Functional description	Connector	Wire number
Interlock In (secondary 1 HVC 150S)	X286-4	Brown
Interlock Out (secondary 1 HVC 150S)	X286-6	White
Interlock GND (secondary 1 HVC 150S)	X286-5	Shield
Interlock loop	X286-7	Black
Interlock loop	X286-8	Black

See also Appendix H *Signal connection diagram*.

8. Tighten the connector screws with a tightening torque of 1.3 N·m.

5.8.6. Connect the CAN cable

	NOTICE
	The CAN cable connection is only needed for the HVC 300 kW and 450 kW E-Bus Charger, see for more details section *Cabling* on Page 46.

CAN cable connection in **secondary 2 HVC 150S** (in case of a HVC 450 kW system):

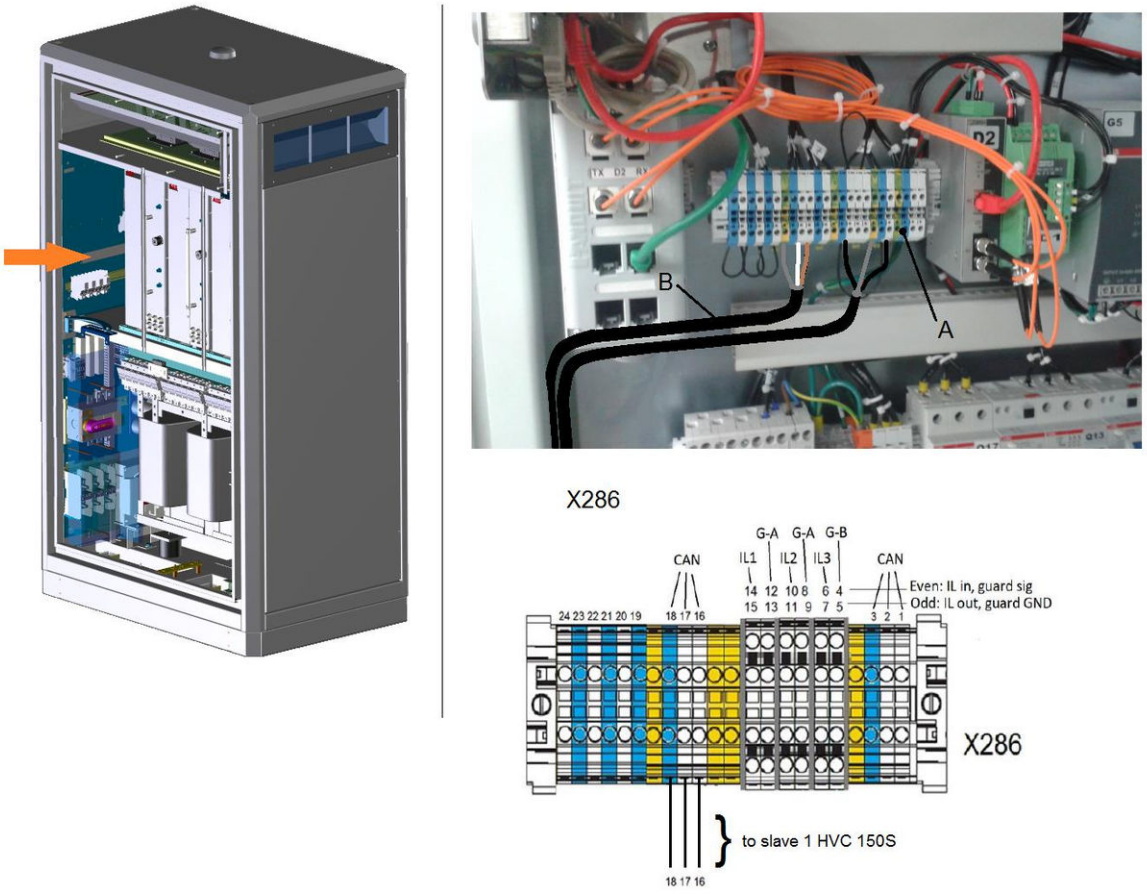

A Terminal block
B CAN cable to secondary 1 HVC 150S

1. Move the cable towards the terminal block (A).
2. Strip 0.43 of the insulation from the ends of the wires.
3. Crimp a ferrule onto the end of the wire.
4. Loosen the connector screws.
5. Insert the wires into the connectors, see table below:

Functional description	Connector	Wire color
CAN H Out	X286-10	Brown
CAN L Out	X286-11	White
CAN GND	X286-12 or Shield Can Out	Shield

See also Appendix H *Signal connection dia*

6. Tighten the connector screws with a tightening torque of 1.3 N·m.

CAN cable connection in **secondary 1 HVC 150S**:

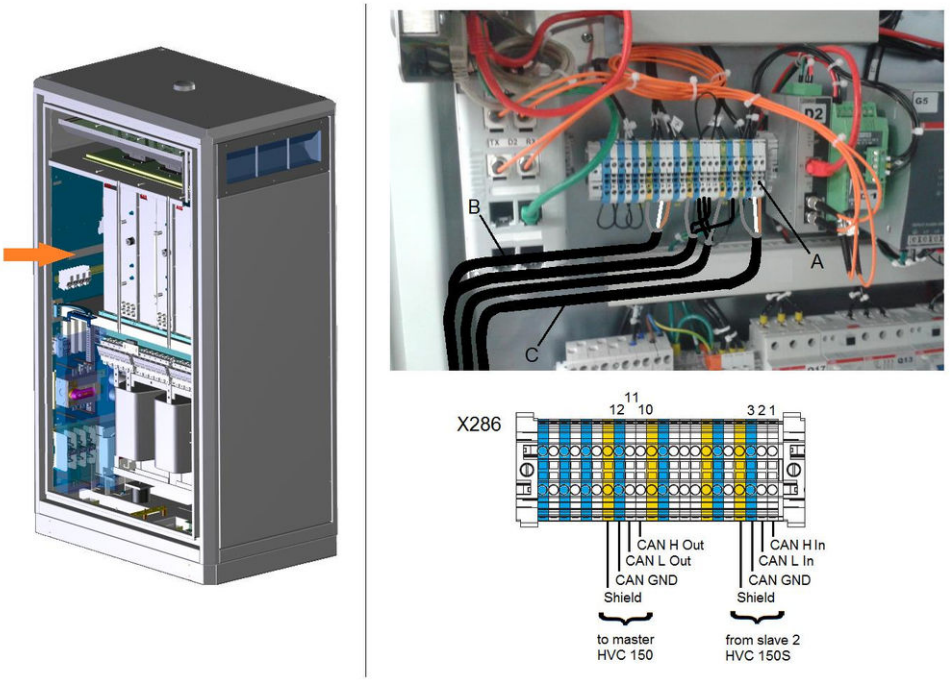

A Terminal block
B CAN cable to primary HVC 150
C CAN cable from secondary 2 HVC 150S (in case of a HVC 450 kW system)

1. Move the cable towards the terminal block (A).
2. Strip 11 mm of the insulation from the ends of the wires.
3. Crimp a ferrule onto the end of the wire.
4. Loosen the connector screws.
5. Insert the wires into the connectors, see table below:

Functional description	Connector	Wire color
CAN H In (to primary HVC 150)	X286-1	Brown
CAN L In (to primary HVC 150)	X286-2	White
CAN GND (to primary HVC 150)	X286-3 or Shield Can In	Shield
CAN H Out (from secondary 2 HVC 150S)	X286-10	Brown
CAN L Out (from secondary 2 HVC 150S)	X286-11	White
CAN GND (from secondary 2 HVC 150S)	X286-12 or Shield Can Out	Shield

See also Appendix H *Signal connection diagram*.

6. Tighten the connector screws with a tightening torque of 1.3 N·m.

CAN cable connection in **primary HVC 150**:

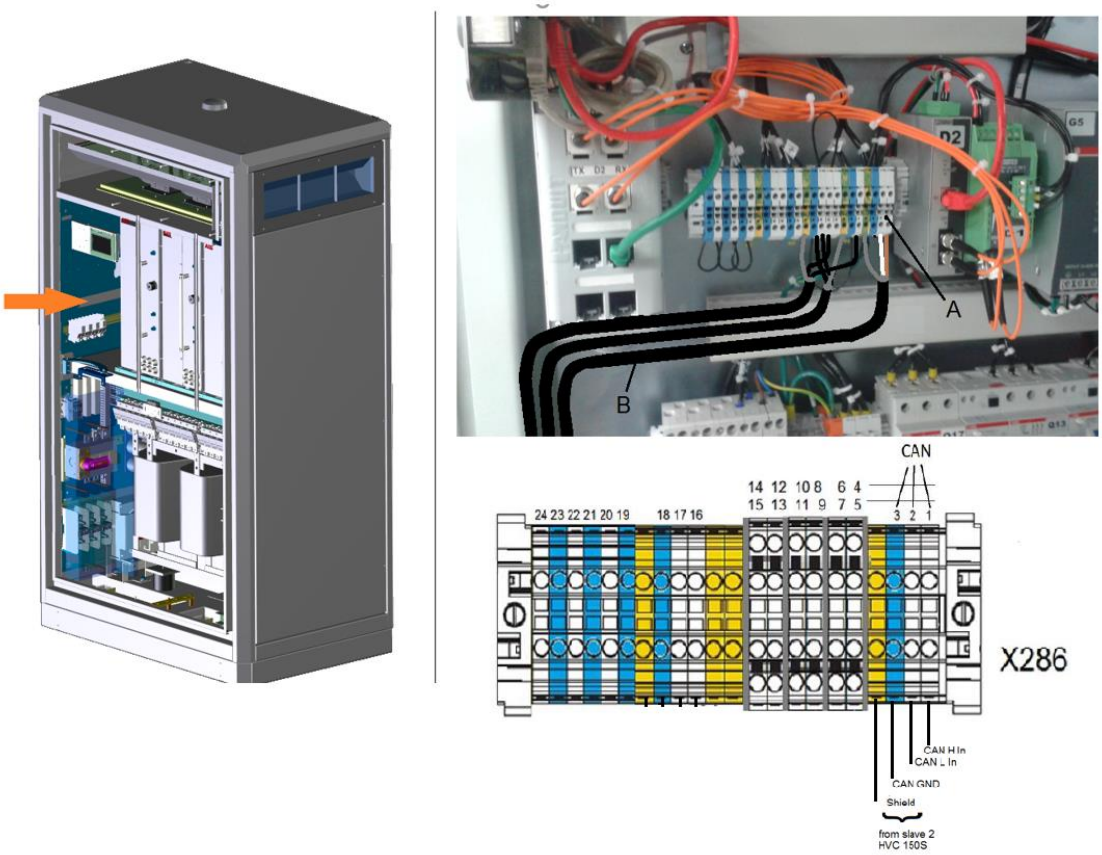

A Terminal block
B CAN cable from secondary 1 HVC 150S

1. Move the cable towards the terminal block (A).
2. Strip 0.43 Inch of the insulation from the ends of the wires.
3. Crimp a ferrule onto the end of the wire.
4. Loosen the connector screws.
5. Insert the wires into the connectors, see table below:

Functional description	Connector	Wire color
CAN H In	X286-1	Brown
CAN L Out	X286-2	White
CAN GND	X286-3 or Shield Can In	Shield

See also Appendix H *Signal connection diagram*.

6. Tighten the connector screws with a tightening torque of 1.3 N·m.

5.9. Connect the communication cable Power Cabinet

	NOTICE
	The communication fiber cables to the ACS Control Module are only connected within the primary HVC 150 Power Cabinet, see for more details section *Cabling* on Page 46.

5.9.1. Route the cable to the terminal blocks

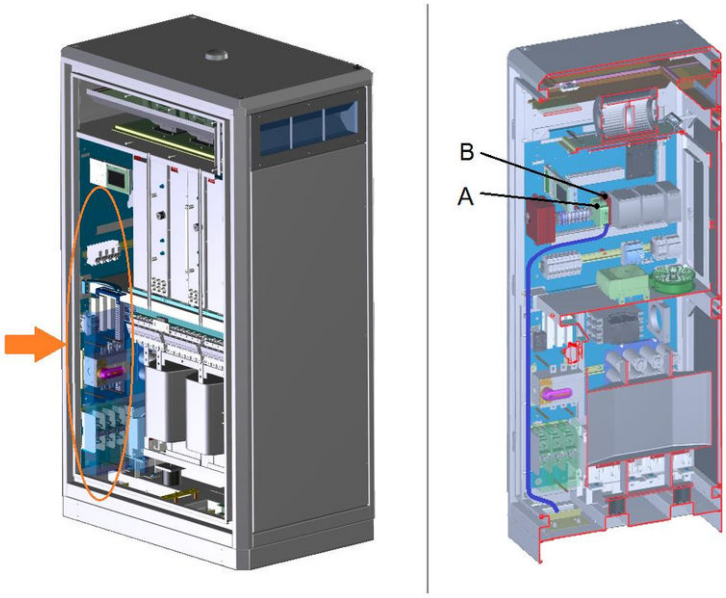

Preferred cable route

1. Route the communication fiber cable to module D1 (B) and D2 (A). Refer to the figure for the preferred cable route inside the cabinet (only within the HVC 150).

5.9.2. Connect the communication fiber cables

Preconditions:

- Tools: tak-ty or ty-raps

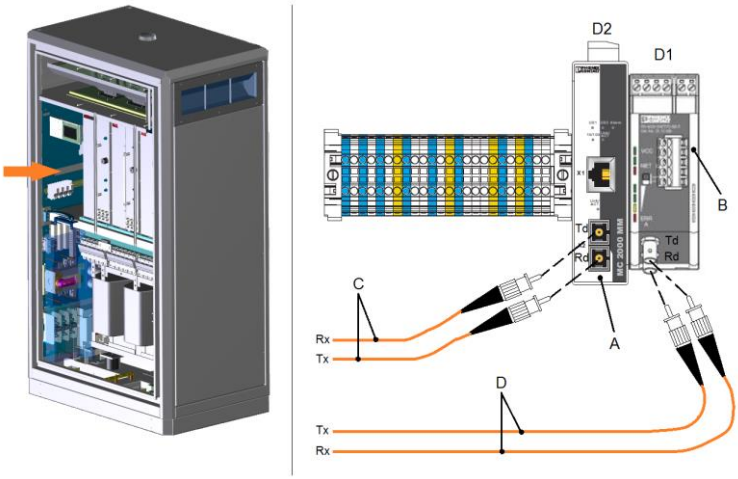

1. Remove the protection covers from the optical connectors.
2. Connect the two Ethernet fiber cables (C) onto the module D2 (A):
   - Rx with Td D2;
   - Tx with Rd D2.
3. Connect the two CAN bus fiber cables (D) onto module D1 (B):
   - Rx with Td D1;
   - Tx with Rd D1.

	NOTICE
	Four fiber cables are not connected. Those fiber cables are meant for spare.

4. Bind the cables together and secure the loops loosely with a piece of tak-ty or ty-rap.

	CAUTION
	Make the loop bend radius of the fiber cables not smaller than 64 mm, otherwise the core of the fiber cable may break.

5.10. Close the door of the Power Cabinet

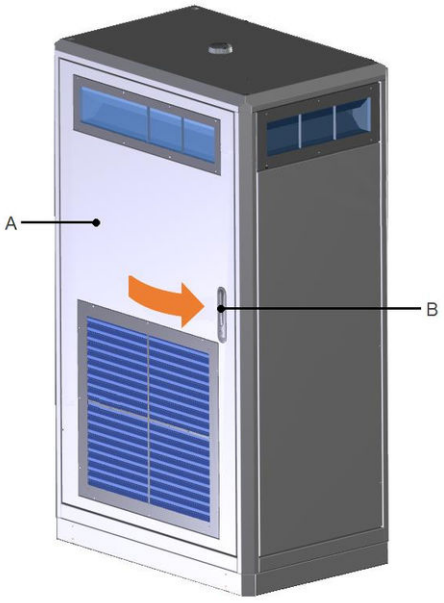

Preconditions:

- Key that were removed from the Power Cabinet

1. Close the door (A).
2. Lock the handle (B).

5.11. Installation of the Pantograph

5.11.1. Before unpacking

The Pantograph will be delivered within a wooden box.

	**NOTICE** **Unloading Pantograph** The delivery truck only unloads the pallet carrying the Pantograph. The delivery truck will not move the Pantograph to its final location. The placement of the Pantograph to its final location is the responsibility of the contractor. Upon request it is possible to order a truck with a crane.
	**CAUTION** Do not pollute the environment with plastic and cardboard packing. Depollute these things according the regional applicable regulations as well as environment-friendly.

Preconditions:

- All construction work is completed.
- The product is delivered by a transport company at the confirmed date of delivery.
- Crane or forklift truck to lift the pantograph. The load is about 180 kg.
- Boom lift to install the pantograph to the ceiling or construction and connect the cables onto the pantograph. Required height about 6 meter.

1. Check both boxes for damages.

5.11.2. Move the Pantograph to position

Preconditions:

- The box with the pantograph are unloaded from the delivery truck.
- The area, which the pantograph shall be installed, for installation is prepared. This means that the place where the pantograph shall be installed is clean and that the mounting construction on which the pantograph shall be installed is ready.
- The work must be carried out by at least two persons.
- Tools: cross-head screwdriver, spanner (size 24).

	**DANGER** Make sure that the main switch of the power supply group for the product is set to the OFF position. Do a voltage check to make sure that the electrical power is disconnected from the system. Secure against resetting.
	**WARNING** Make sure that personnel cannot be crushed or get stuck while moving the parts of the pantograph.

	**WARNING** Before mounting the pantograph affix a rope or cable to the crossbar of the upper arm and to the base frame so that the pantograph cannot lower unexpected out of housed position.
	**WARNING** Make sure that personnel cannot be falling from the platform when working at height.
	**CAUTION** **Warranty** Damage due to moving the pantograph to its position is not covered by the warranty.
	**NOTICE** The pantograph must be mounted on a plane surface. The frame must not be distorted.

1. Move the wooden box with the pantograph underneath the installation location (make sure the hinge points in the right direction, see section *Pantograph position in Y-axis in relation with the bus* on Page 32).

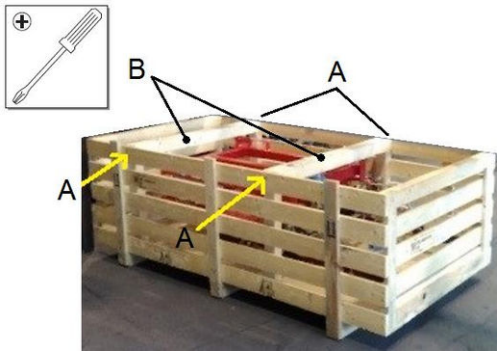

2. Remove the screws (A) (4x) to release the carriers (B) (2x) from the sides of the wooden box.

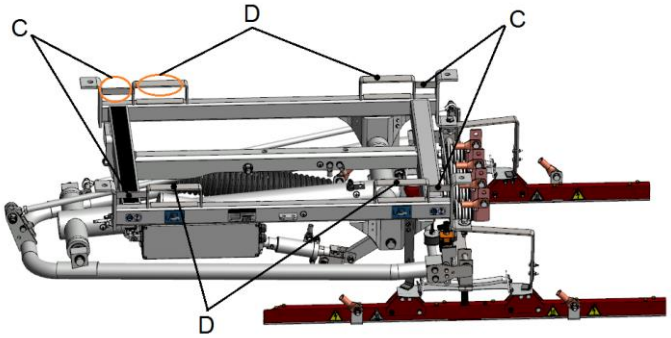

3. Use the right existing lifting eyes on the Pantograph, lifting eyes (C) for crane or lifting eyes (D) for forklift truck (see picture above), to lift-up the Pantograph.

	NOTICE
	When lift-up the Pantograph by using a forklift truck, remove onside of the wooden box. For lifting with crane only, use textile belts, so that the paint will not be damaged.

4. Lift-up the Pantograph a little bit and remove the carriers (B) (2x).
5. Lift the Pantograph to the mounting location. By lifting the Pantograph make sure that an additional person is present at the appropriate position of the mounting location to guide the Pantograph to the correct place.

	CAUTION
	During lifting be aware not to damage any lower parts of the pantograph.

5.11.3. Mounting the Pantograph

Preconditions:

- The work must be carried out by at least two persons.
- Parts: M16 x 40 Class 8.8 bolt (4x), M16 washer (4x), M16 spring washer (4x).
- Tools: boom lift, spanner (size 24), torque-wrench (size 24).

	WARNING
	Make sure that personnel cannot be falling from the platform when working at height.

How to mounting the pantograph depends very much on the construction on site and may differ per location. The steps below give a general procedure for mounting the Pantograph.

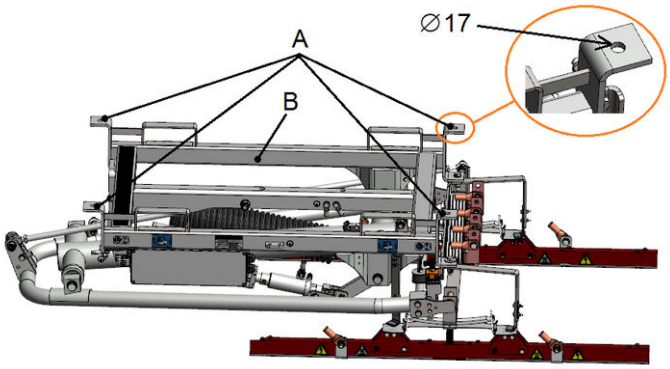

1. When lifting the Pantograph, slowly move the Pantograph so that the boreholes (A) in the base frame (B) are aligned with the appropriate bore holes of the construction on which the Pantograph will be mounted.

2. Fix the base frame (B) with M16 bolts, washers and spring washers (4x) (provided by the customer).
3. Tighten the bolts with a tightening torque of 110 N·m.
4. Check that the Pantograph's base frame (B) is planar and bear on without tension.

	NOTICE
	The bolted fastenings have to be marked after fixing with required tightening torque with a suitable marker pin. 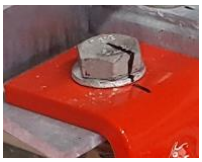

5.11.4. Using the ABB Pantograph mounting brackets

Preconditions:

- The construction on which the mounting brackets must be placed is prepared.
- The work must be carried out by at least two persons.
- Parts: M10 Class 8.8 bolt (16x), M10 washer (16x), M10 spring washer (16x), M16 x 40 Class 8.8 bolt (4x), M16 washer (4x), M16 spring washer (4x).
- Tools: boom lift, spanner (size 17 and 24), torque-wrench (size 17 and 24).

	WARNING
	Make sure that personnel cannot be falling from the platform when working at height.

See Appendix E *Dimensions Pantograph mounting brackets* for the correction position of the mounting holes, for installing the mounting brackets.

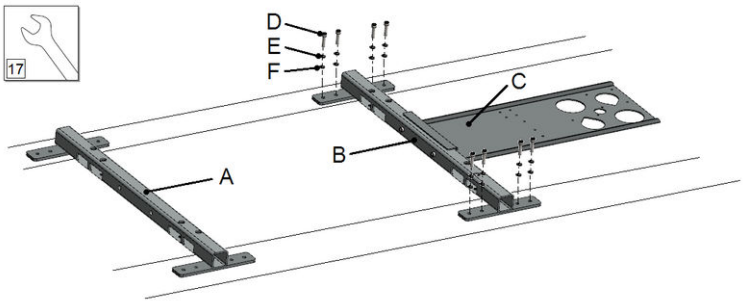

1. Place the bracket for the left side (A) and for the right side (B) on the construction.

	NOTICE
	The right side bracket (B) with the bracket for Wi-Fi communication unit and RFID antenna (C) must always mounted on the opposite side of the pantograph's hinge point.

2. Mount the right side bracket (B) by fixing it with M10 bolts (D) (8x) in combination with spring washers (E) and washers (F) (provided by the customer). The way of fixing the bolts depends on the construction!
3. Tighten the bolts with a tightening torque of 45 N·m.
4. Lift the Pantograph at the height of the Brackets.

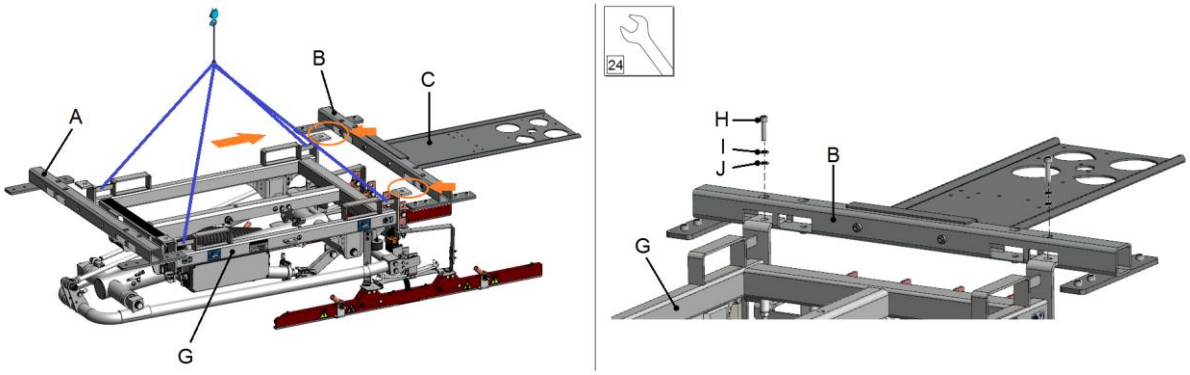

5. Move the Pantograph's base frame (G) to the right side bracket (B) and aligned with the appropriate holes within the bracket (B) on which the Pantograph will be mounted.
6. Fix the base frame (G) with M16 bolts (H), spring washers (I) and washers (J) (2x) (provided by the customer) to the bracket (B).
7. Tighten the bolts with a tightening torque of 110 N·m.

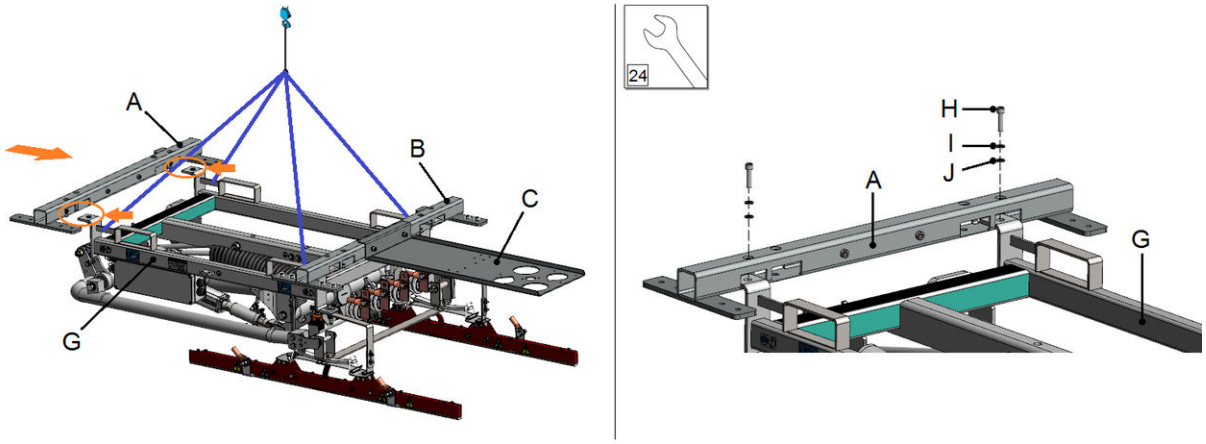

8. Move the left side bracket (A) to the Pantograph's base frame (G) and aligned with the appropriate holes within the Bracket (A) on which the Pantograph will be mounted.
9. Fix the base frame (G) with M16 bolts (H), spring washers (I) and washers (J) (2x) (provided by the customer) to the bracket (B).
10. Tighten the bolts with a tightening torque of 110 N·m.

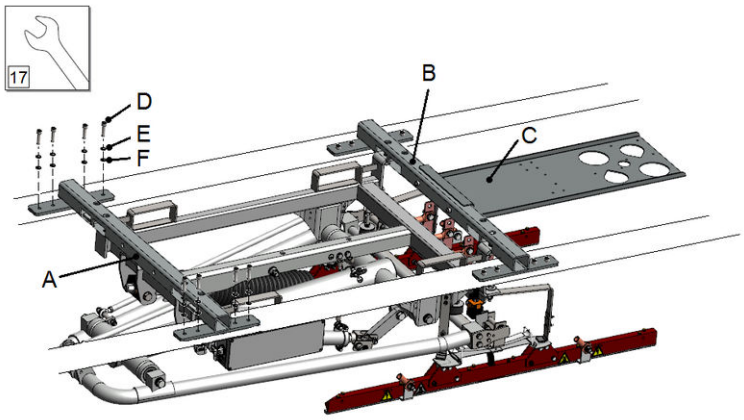

11. Mount the left side bracket (A) by fixing it with M10 bolts (D) (8x) in combination with spring washers (E) and washers (F) (provided by the customer). The way of fixing the bolts depends on the construction!
12. Tighten the bolts with a tightening torque of 45 N·m.
13. Check that the Pantograph's base frame (G) is planar and bear on without tension.

	NOTICE
	The bolted fastenings have to be marked after fixing with required tightening torque with a suitable marker pin. 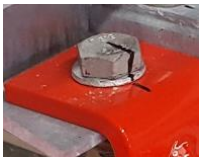

5.12. Mounting the WiFi antenna and RFID unit (optional)

Preconditions:

- All construction work is completed.
- The work must be carried out by at least two persons.
- Parts: M5 nut (4x), M5 washer (4x), M5 spring washer (4x), M6 x 20 bolt (4x), M6 washer (4x), spring washer (4x).
- Tools: boom lift, spanner (size 8 and 10), torque-wrench (size 8 and 10).

	WARNING
	Make sure that personnel cannot be falling from the platform when working at height.

Before mounting the WiFi antenna, see section *WiFi antenna position in relation to the bus* on Page 36.

The following steps are described assuming the ABB Pantograph mounting bracket is used. However, the following steps can also be used with a self-constructed structure for mounting the WiFi antenna.

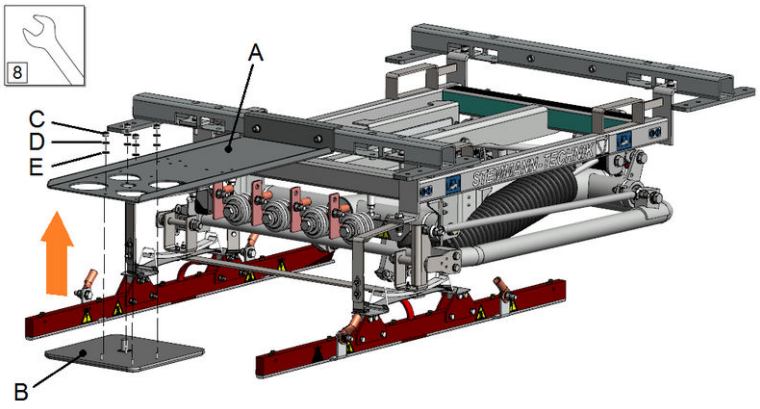

1. Place the WiFi antenna (B) on the bracket (A) with the "Hor.Up" sign pointing in the drive direction of the bus (see section *WiFi antenna position in relation to the bus* on Page 36).
2. Fix the WiFi antenna (B) with M5 nuts (C), spring washers (D) and washers (E) (4x) (provided by the customer) to the bracket (A).
3. Tighten the nuts with a tightening torque of 5 N·m.

	NOTICE
	The RFID unit is only needed when multiple Pantographs are installed close to each other (distance between each other is lower than 12 m) and the bus is equipped with a RFID tack on the roof of the bus.

The following steps are described assuming the ABB Pantograph mounting bracket is used. However, the following steps can also be used with a self-constructed structure for mounting the RFID unit. The RFID unit must be placed close to the WiFi antenna.

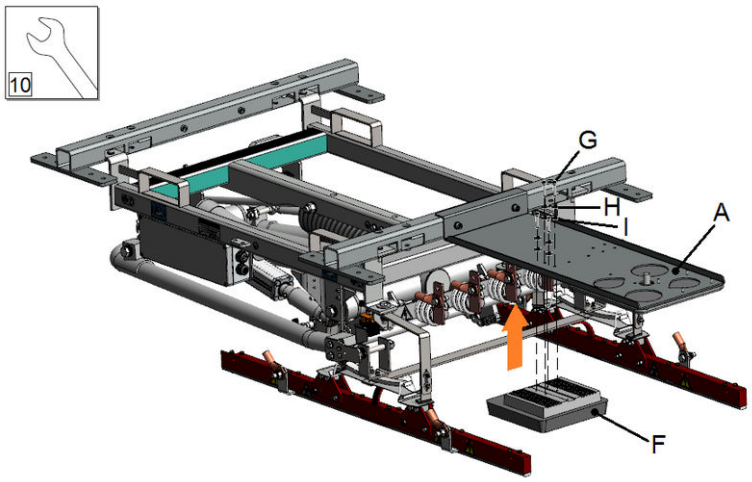

1. Place the RFID unit (F) on the bracket (A) and aligned the RFID mounting holes with the holes in the bracket (A).
2. Fix the RFID unit (F) with M6 bolts (G), spring washers (H) and washers (I) (4x) (provided by the customer) to the bracket (A).
3. Tighten the bolts with a tightening torque of 9 N·m.

5.13. Connect cables to Pantograph

Preconditions:

- The Pantograph, the WiFi communication unit and RFID unit (optional) are placed.
- The work must be carried out by at least two persons.
- Tools: boom lift.

	DANGER
	Make sure that the main switch of the power supply group for the product is set to the OFF position. Do a voltage check to make sure that the electrical power is disconnected from the system. Secure against resetting.
	WARNING
	Make sure that personnel cannot be falling from the platform when working at height.

	CAUTION
	Do not pollute the environment with plastic and cardboard packing. Depollute these things according the regional applicable regulations as well as environment-friendly.

5.13.1. Connect the PE wire to the Pantograph frame

Preconditions:

- Parts: 35/M10 tubular cable lug (1x), M10 x 30 Class 8.8 bolt (1x), M10 washer (1x), M10 spring washer (1x), M10 nut (1x).
- Tools: wire cutter, wire stripper, crimp pliers, spanner (size 17), torque-wrench (size 17).

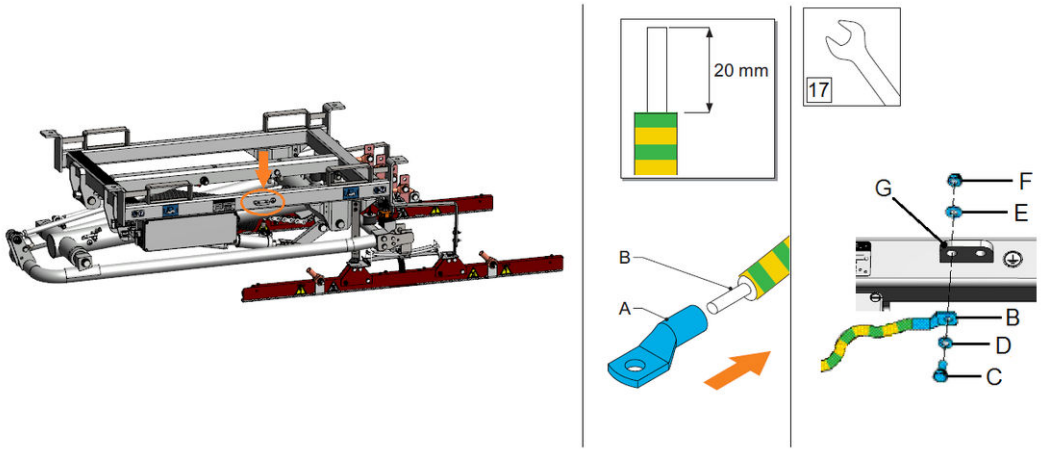

1. Cut the PE wire to the correct length to reach the PE connection (G) on the Pantograph's base frame. Do not make the wire routing too tight, or too loose.
2. Strip 20 mm of the insulation from the end of the wire.
3. Attach the cable lug (A) to the end of the PE wire (B).
4. Fit the M10 bolt (C) with washer (D) and the PE wire (B).
5. Insert the bolt fitted with the PE wire into the PE connection (G).
6. Screw from the top of the PE connection (G) a spring washer (E) and a nut (F) on the bolt (C).
7. Tighten the bolt/nut connection with a tightening torque of 45 N·m.

5.13.2. Connect the ACS PE and CP/PE wire to the Pantograph

Preconditions:

- Parts: 35/M12 tubular cable lug (1x), 16 AWG/M12 ring tongue crimp ferrule (2x), M12 x 40 Class 8.8 bolt (2x), M12 washer (4x), M12 spring washer (2x), M12 nut (2x), heat-shrink 2:1 Ø 9.5 mm.
- Tools: wire cutter, wire stripper, crimp pliers, spanner (size 19), torque-wrench (size 19).

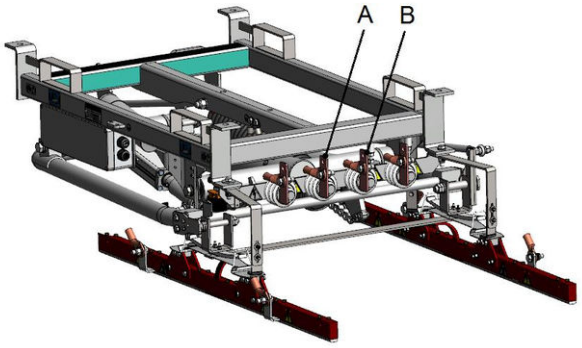

A ACS PE connector B CP connector

1. Cut the CP/PE cable to the correct length to reach the CP connector (B) on the Pantograph. Do not make the wire routing too tight, or too loose.
2. Strip 300 mm insulation from the cable.
3. Cut off the shielding.
4. Place a 40 mm long heat-shrink and a label “CP/PE” at the end of the cable.
5. Strip 11 mm of the insulation from both the ends of the wires.
6. Crimp the ferrules onto the end of the wires.

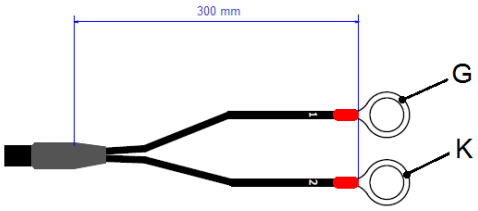

G wire 1: CP K wire 2: PE

7. Cut the PE wire to the correct length to reach the ACS PE connector (A) on the Pantograph. Do not make the wire routing too tight, or too loose.

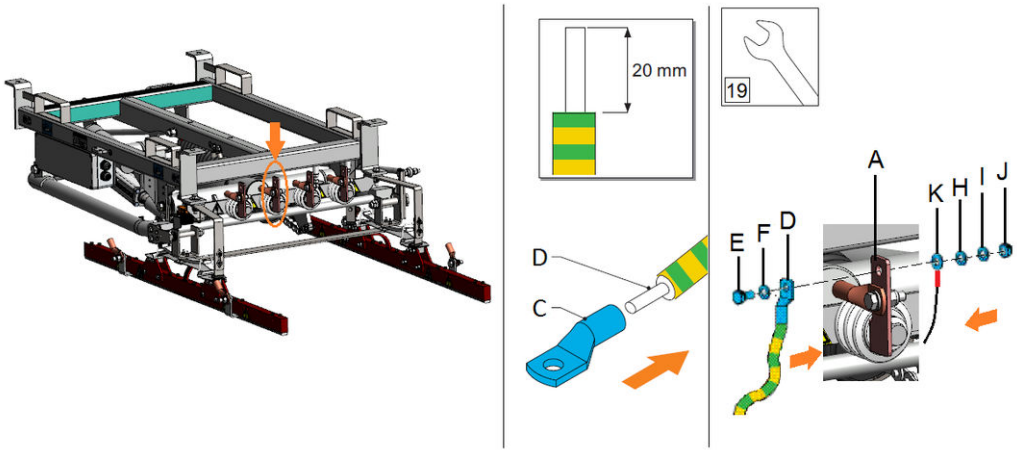

8. Strip 20 mm of the insulation from the end of the wire.
9. Attach the cable lug (C) to the end of the PE wire (D).
10. Fit the M12 bolt (E) with washer (F) and the PE wire (D).
11. Insert the bolt fitted with the PE wire into the ACS PE connector (A).
12. Screw from the other side of the PE connector (A) wire “2” of the CP/PE cable (K), washer (H), spring washer (I) and nut (J) on the bolt (E).
13. Tighten the bolt/nut connection with a tightening torque of 78 N·m.

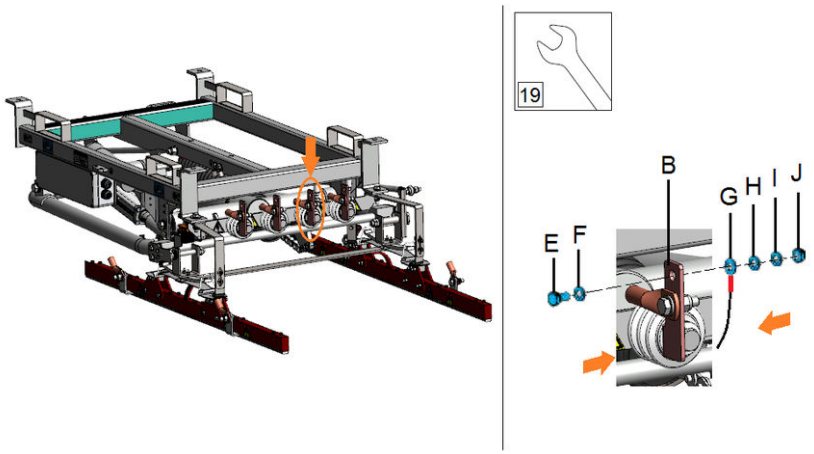

14. Fit the M12 bolt (E) with washer (F).
15. Insert the bolt into the CP connector (B).
15. Screw from the other side of the CP connector (B) wire “1” of the CP/PE cable (G), washer (H), spring washer (I) and nut (J) on the bolt (E).
16. Tighten the bolt/nut connection with a tightening torque of 78 N·m.

5.13.3. Connect DC cables to Pantograph

Preconditions:

- Parts: 185/M12 tubular cable lug (2x, 4x or 6x[3]), M12 x 40 Class 8.8 bolt (2x, 4x or 6x[3]), M12 washer (4x, 8x or 12x[3]), M12 spring washer (2x, 4x or 6x[3]), M12 nut (2x, 4x or 6x[3]), heat-shrink black 2:1 Ø 25.4 mm, heat-shrink red 2:1 Ø 25.4 mm.
- Tools: wire cutter, wire stripper, crimp pliers, spanner (size 19), torque-wrench (size 19).

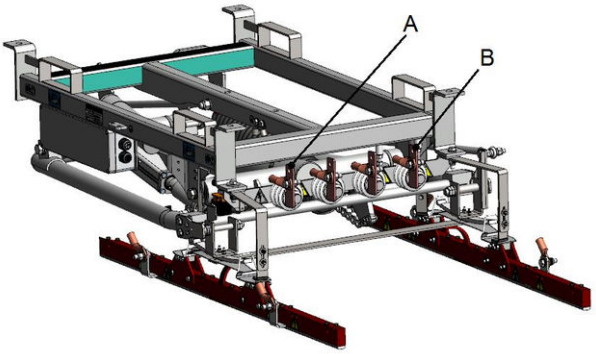

A DC- connector B DC+ connector

1. Cut the wires of the DC power cable to the correct lengths to reach the connectors (A and B). Do not make the wire routing too tight, or too loose.
2. Place 80 mm long heat-shrink (black on DC- and red on DC+ cables).

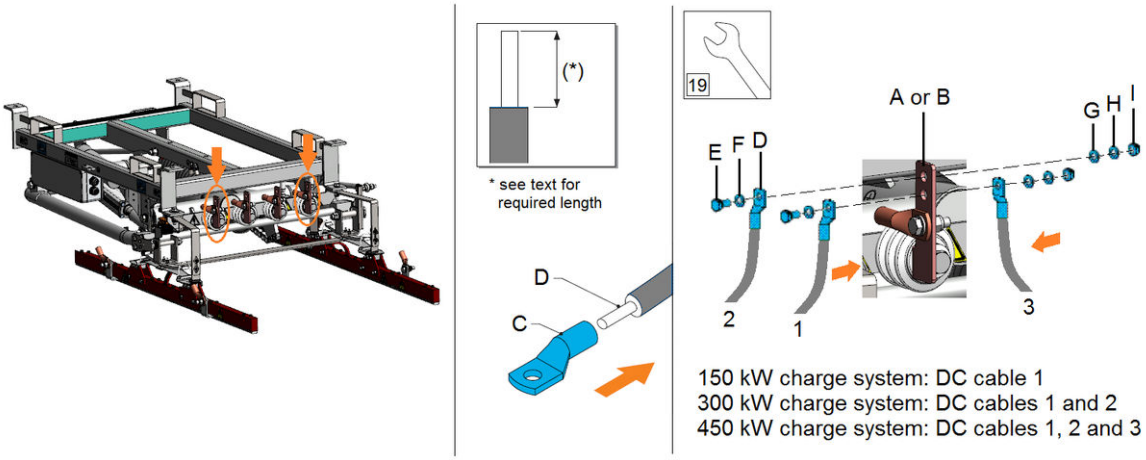

3. Strip the insulation on the required length specified by the used lug from the end of the wire (D).
4. Attach cable lug (C) at the end of the wires and use the heat-shrink to cover the crimp connection.
5. Fit the M12 bolts (E) with washers (F) and the DC+ cable (D).
6. Insert the bolt(s) fitted with the DC+ cable(s) into the DC+ connector (B).
7. Screw from the other side of the DC+ connector (B) the DC+ wire(s) (if needed), washer(s) (G), spring washer(s) (H) and nut(s) (I) on the bolt(s) (E).
8. Fit the M12 bolts (E) with washers (F) and the DC- cable (D).
9. Insert the bolt(s) fitted with the DC- cable(s) into the DC- connector (A).

[3] Depends on the charger system configuration, see section *Charge system configurations* on Page 45.

10. Screw from the other side of the DC- connector (A) the DC- wire(s) (if needed), washer(s) (G), spring washer(s) (H) and nut(s) (I) on the bolt(s) (E).
11. Tighten the bolt/nut connections with a tightening torque of 78 N·m.

5.13.4. Connect ACS control cable to Pantograph

Preconditions:

- Parts: Harting crimp socket Han D 2.5 mm^2 09 15 000 6206 (7x), Harting Gland M20 Brass 10-14 mm 19 00 000 5084 (1x), Harting Han M Hood Top Entry 2 M20 19 37 003 1440 (1x), Harting Insert 12P HAN-Q12-F-QL 09 12 012 3101 (1x).
- Tools: wire cutter, wire stripper, crimp pliers.

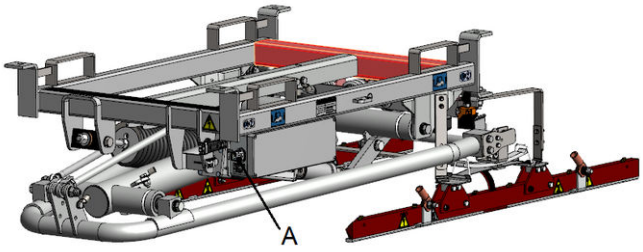

1. Cut the ACS control cable to the correct lengths to reach the connector (A). Do not make the wire routing too tight, or too loose.

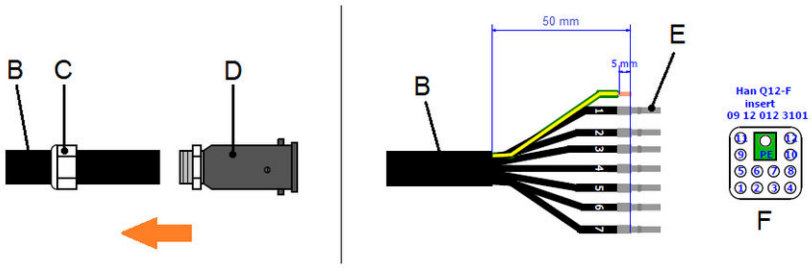

2. Slide the gland (C) and hood (D) over the ACS control cable (B).
3. Strip 50 mm insulation from the cable (B).
4. Strip 5 mm of the insulation from the ends of the wires.
5. Crimp the socket (E) (7x) onto the end of the wire, except the PE wire.
6. Plug the sockets (E) in the correct position into insert (F), see table below:

Functional description	Wire number	Insert position connector (F)
ACS +24V	1	1
ACS -24V	2	2
ACS Extend/Retract Out	3	3
ACS Supply/Retract Out	4	4
ACS Retracted In	5	5
ACS GND_B	6	7
ACS Extended In	7	6

NOTICE

Make sure the pins are locked inside the insert and cannot pushed back.

Wires 6 and 7 are crossed in connector (F).

7. Loosen the PE connector screw of the insert (F).
8. Insert the PE wire (green/yellow) into the insert PE connector.
9. Tighten the connector screw of the insert (F).
10. Slide the hood (D) over the insert (F) and lock it with the included screw.
11. Fasten the gland (C).

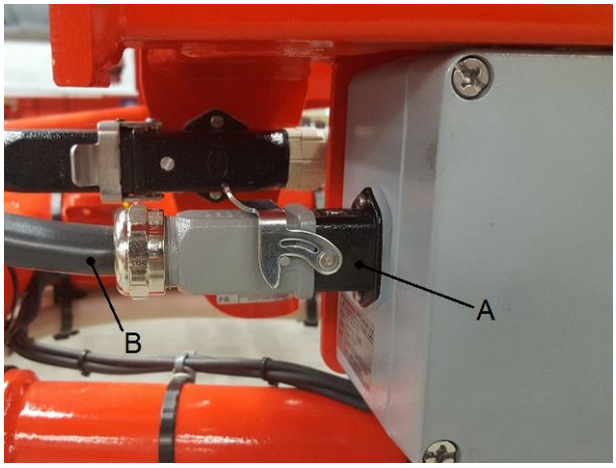

12. Connect the ACS control cable (B) to connector (A) of the pantograph's control box and secure the connector.

5.13.5. Connect ACS heater cable to Pantograph

Preconditions:

- Parts: Harting female crimp Han C 2.5 mm^2 09 32 000 6205 (3x), Harting gland M20 Brass 6-12 mm 19 00 000 5082 (1x), Harting Han M Hood top entry 2 M20 19 37 003 1440 (1x), Harting Insert Han Q 2/0-f-crimp HV 09 12 002 3152 (1x).
- Tools: wire cutter, wire stripper, crimp pliers.

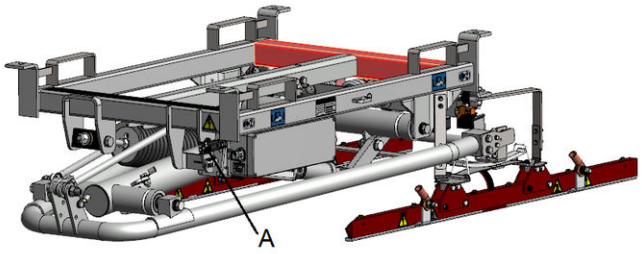

1. Cut the ACS heater cable to the correct lengths to reach the connector (A). Do not make the wire routing too tight, or too loose.

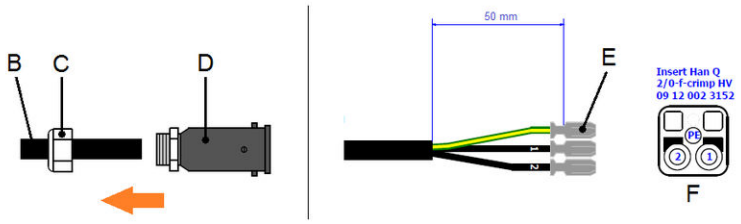

2. Slide the gland (C) and hood (D) over the ACS control cable (B).
3. Strip 50 mm insulation from the cable (B).
4. Strip 5 mm of the insulation from the ends of the wires.
5. Crimp the socket (E) (3x) onto the end of the wire.
6. Plug the sockets (E) in the correct position into insert (F), see table below:

Functional description	Wire number	Insert position connector (F)
ACS L Heater	1	1
ACS N Heater	2	2
GND	Green/yellow	3

	NOTICE
	Make sure the pins are locked inside the insert and cannot pushed back.

7. Slide the hood (D) over the insert (F) and lock it with the included screw.
8. Fasten the gland (C).

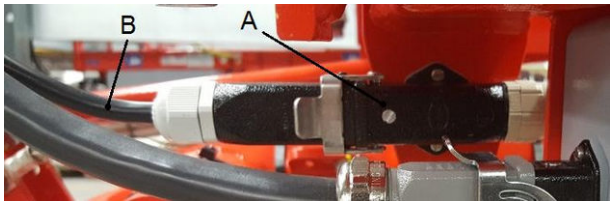

9. Connect the ACS heater cable (B) to connector (A) on the pantograph and secure the connector.

5.13.6. Connect the WiFi cable to the WiFi antenna

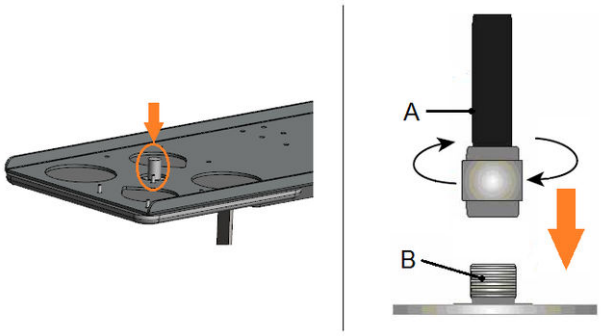

1. Route the WiFi cable (A) to the WiFi antenna.
2. Insert the WiFi type N-plug into the WiFi connector (B).
3. Hand tighten the WiFi plug.

	NOTICE
	Make sure that the WiFi cable (A) avoid loops and the routing between pantograph and ACM is kept far to the DC cables or other sources that can cause radiated noise (ex. Electric motors). If the above conditions are not meets, WiFi communication malfunction could happen.

5.13.7. Connect the RFID cables to the RFID unit (optional)

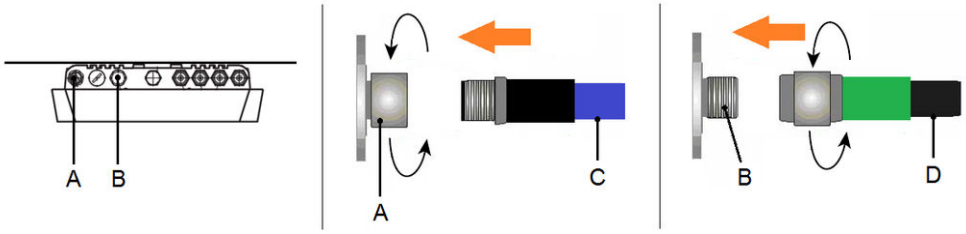

1. Route the RFID Ethernet cable (C) and the RFID Power cable (D) to the RFID unit.
2. Remove the protection cover caps from the connectors (A and B).
3. Insert the RFID M12 plug of the Ethernet cable (C) into the Ethernet connector (A).
4. Hand tighten the Ethernet connector (A).
4. Insert the RFID Power plug into the Power/Serial Data/CAN/I/O connector (B).
5. Hand tighten the RFID Power plug.

5.14. Unpack the ACS Control Module/Junction Box

5.14.1. Before unpacking

	CAUTION
	Do not pollute the environment with plastic and cardboard packing. Depollute these things according the regional applicable regulations as well as environment-friendly.

Preconditions:

- All construction work is completed.
- The product is delivered by a transport company at the confirmed date of delivery.

1. Check both boxes for damages.

5.14.2. Remove packaging

Preconditions:

- The installation work must be carried out by at least two persons.

	WARNING
	Make sure that personnel cannot be crushed or become trapped while moving the ACS Control Module out of the box.
	CAUTION
	**Warranty** Damage due to moving the ACS Control Module and Junction Box out of the box is not covered by the warranty.

1. Unpack the ACS Control Module and the Junction Box.
2. Remove the bag which contain the keys. The bag is attached with tape on the door of the ACS Control Module.
3. Lift the ACS Control Module out of the box.

4. Lift the Junction Box out of the box.
5. Place both ACS Control Module and Junction Box on the ground with its top facing up.

5.15. Install ACS Control Module and Junction Box onto wall

Preconditions:

- All packaging material is removed from the ACS Control Module and Junction Box.
- A minimum of two persons is required.
- Tools: key, spanner (size 13), torque wrench (size 13), cross-head screwdriver.

	**WARNING** Make sure that personnel cannot be crushed or become trapped while moving the ACS Control Module.
	**CAUTION** **Warranty** Damage due to moving the ACS Control Module and Junction Box to its position is not covered by the warranty.
	**CAUTION** Do not use a compressor to clean the ACS Control Module. Use a vacuum cleaner.
	**CAUTION** Attach the ACS Control Module and the Junction Box to a solid wall or support structure that can support the weight of the ACS Control Module (= 49.0 kg) and the Junction Box (= 10.5 kg). Also the mounting points within the wall or support structure must withstand at least 3 to 4 times the weight of the ACS Control Module and the Junction Box.

5.15.1. Using the wall-mounting brackets (only for ACM)

The ACS Control Module can be easily mounted by using the wall-mounting brackets, see *Wall-mounting brackets for safe wall fixing* on Page 20.

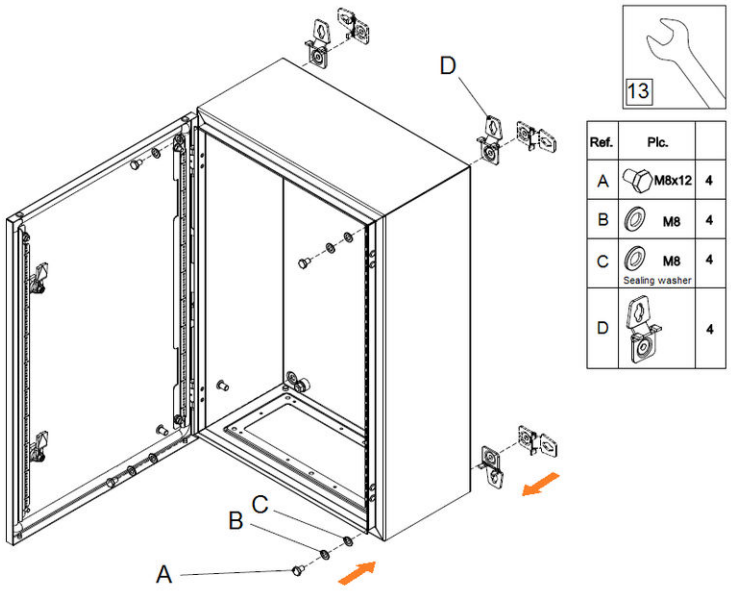

1. Determine whether the wall-mounting brackets (D) should be mounted horizontally or vertically, see also section *Workflow for wall mounting* on Page 45.
2. Open the door of the ACS Control Module.
3. Put the wall-mounting brackets (D) (4x) against the back side of the ACS Control Module.
4. Insert the M8 bolt (A), washer (B) and sealing washer (C) from the inside of the box into the holes of the back side into the wall-mounting brackets (D) (4x).
5. Tighten the bolts with a tightening torque of 10 – 15 N·m.
6. Close the door of the ACS Control Module.

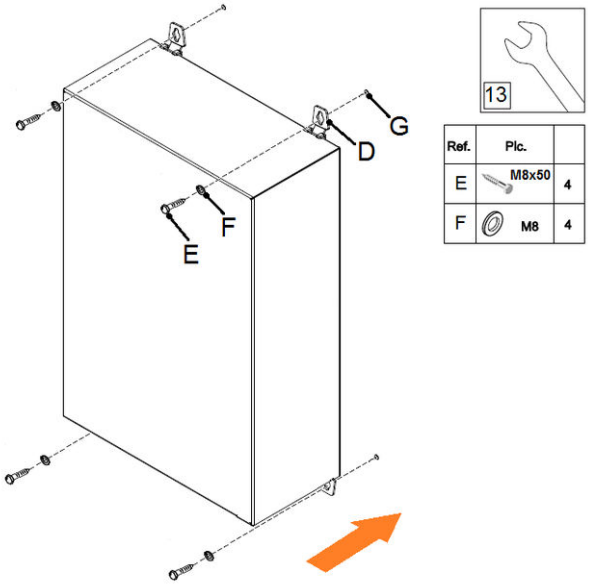

7. Carefully place the ACS Control Module against the wall.
8. Make sure that the ACS Control Module is aligned with the drilled holes (G) in the wall.
9. Insert the M8 wood-wire-bolts (E) fitted with the washers (F) into the holes of the wall-mounting brackets (D) (4x).

10. Tighten the wood-wire-bolts with a tightening torque of 10 – 15 N·m.

5.15.2. Direct wall mounting

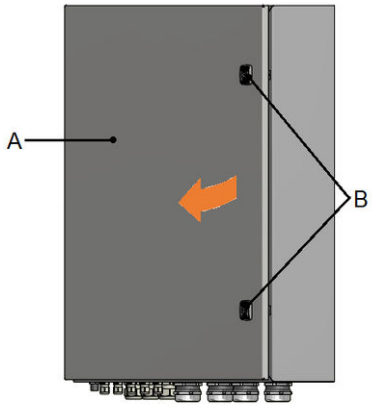

1. Unlock the locks (B) of the ACS Control Module.
2. Open the door (A).

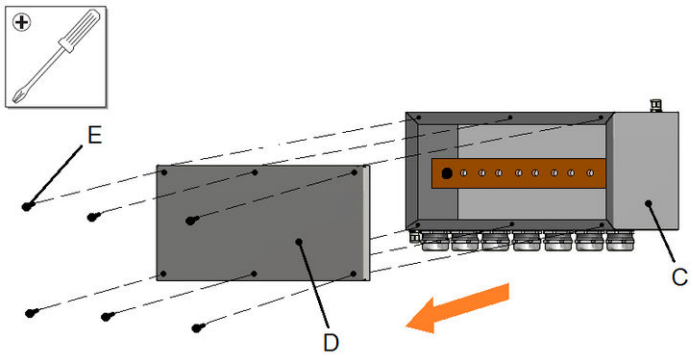

3. Loosen the screws (E) (6x) of the Junction Box (C).
4. Remove the cover (D) from the Junction Box (C).

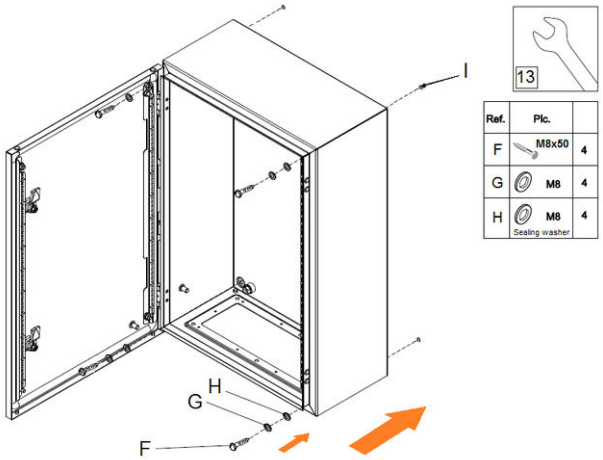

5. Carefully place the ACS Control Module and the Junction Box against the wall.
6. Make sure that the ACS Control Module and the Junction Box is aligned with the drilled holes (I) in the wall.

7. Insert the M8 wood-wire-bolts (F) fitted with the washers (G) and sealing washers (H) into the holes (4x).
8. Tighten the wood-wire-bolts with a tightening torque of 10 – 15 N·m.

5.16. Connect PE wires to central PE-rail

Preconditions:

- There is placed near to the ACS Control Module a central PE connection point (eg PE- or earth-rail).
- Parts: 35/M8 tubular cable lug (6x)
- Tools: wire cutter, wire stripper, crimp pliers, spanner (size 13)

	DANGER
	Make sure that the main switch of the power supply group for the product is set to the OFF position. Do a voltage check to make sure that the electrical power is disconnected from the system. Secure against resetting.

All PE connections described in this section must be connected to one central point. An PE- or earth-rail, as shown in the figure below, can be used for this that has at least six M8 bolt connections.



The delivery of the earth-rail are not in the scope of supply of ABB.

5.16.1. Connect the PE wire of the ACS PE

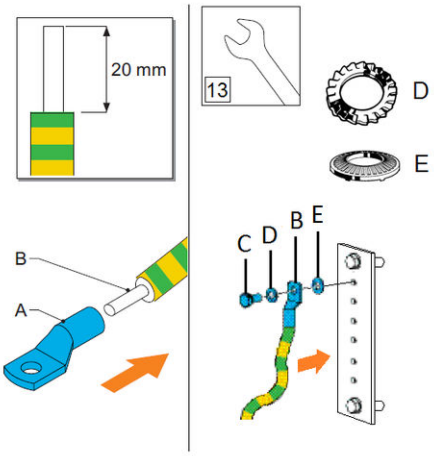

1. Cut the PE wire to the correct length to reach the PE rail. Do not make the wire routing too tight, or too loose.
2. Strip 20 mm of the insulation from the end of the wire.
3. Attach a wire end ring (A) to the end of the PE wire (B).

4. Remove the M8 bolt and washers from the PE rail.
5. Fit the bolt (C) with toothed washer (D), the PE wire (B) and the contact washer (E).
6. Insert the bolt fitted with the PE wire into the PE rail.
7. Tighten the bolt with a tightening torque of 15 N·m.

5.16.2. Connect the PE wire from the Pantograph frame

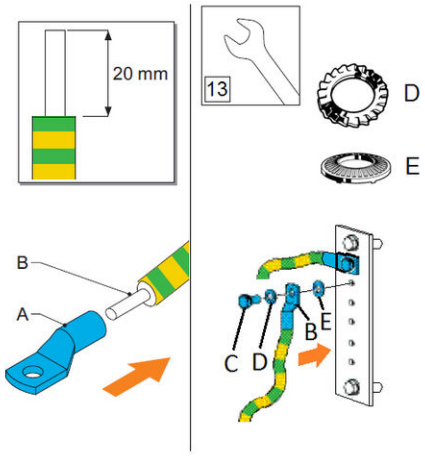

1. Cut the PE wire to the correct length to reach the PE rail. Do not make the wire routing too tight, or too loose.
2. Strip 20 mm of the insulation from the end of the wire.
3. Attach a wire end ring (A) to the end of the PE wire (B).
4. Remove the M8 bolt and washers from the PE rail.
5. Fit the bolt (C) with toothed washer (D), the PE wire (B) and the contact washer (E).
6. Insert the bolt fitted with the PE wire into the PE rail.
7. Tighten the bolt with a tightening torque of 15 N·m.

5.16.3. Connect the PE wire from the ACS Control Module

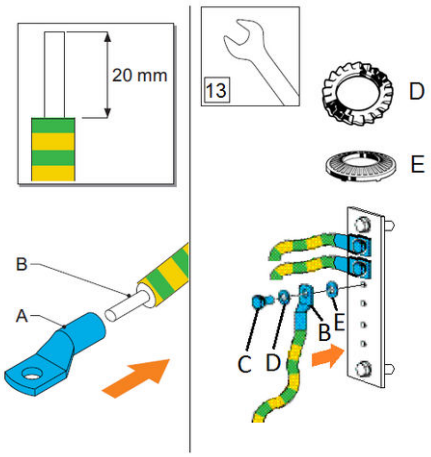

1. Cut the PE wire to the correct length to reach the PE rail. Do not make the wire routing too tight, or too loose.
2. Strip 20 mm of the insulation from the end of the wire.
3. Attach a wire end ring (A) to the end of the PE wire (B).
4. Remove the M8 bolt and washers from the PE rail.
5. Fit the bolt (C) with toothed washer (D), the PE wire (B) and the contact washer (E).
6. Insert the bolt fitted with the PE wire into the PE rail.
7. Tighten the bolt with a tightening torque of 15 N·m.

5.16.4. Connect the PE wire from the Junction Box

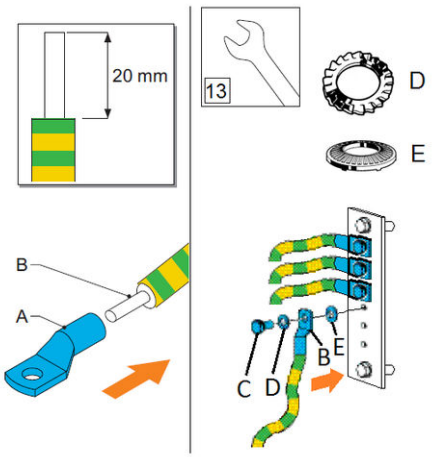

1. Cut the PE wire to the correct length to reach the PE rail. Do not make the wire routing too tight, or too loose.
2. Strip 20 mm of the insulation from the end of the wire.
3. Attach a wire end ring (A) to the end of the PE wire (B).
4. Remove the M8 bolt and washers from the PE rail.
5. Fit the bolt (C) with toothed washer (D), the PE wire (B) and the contact washer (E).
6. Insert the bolt fitted with the PE wire into the PE rail.
7. Tighten the bolt with a tightening torque of 15 N·m.

5.16.5. Connect the PE wire of the Power Cabinet

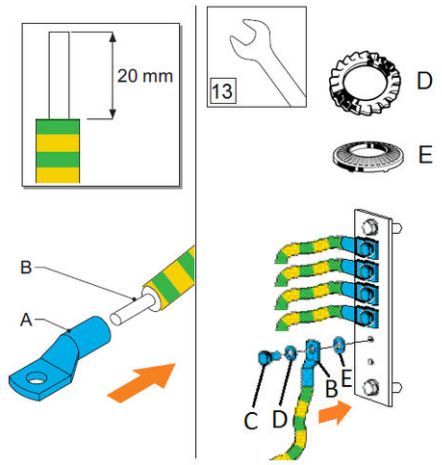

1. Cut the PE wire to the correct length to reach the PE rail. Do not make the wire routing too tight, or too loose.
2. Strip 20 mm of the insulation from the end of the wire.
3. Attach a wire end ring (A) to the end of the PE wire (B).
4. Remove the M8 bolt and washers from the PE rail.
5. Fit the bolt (C) with toothed washer (D), the PE wire (B) and the contact washer (E).
6. Insert the bolt fitted with the PE wire into the PE rail.
7. Tighten the bolt with a tightening torque of 15 N·m.

5.16.6. Install lighting protection (optional)

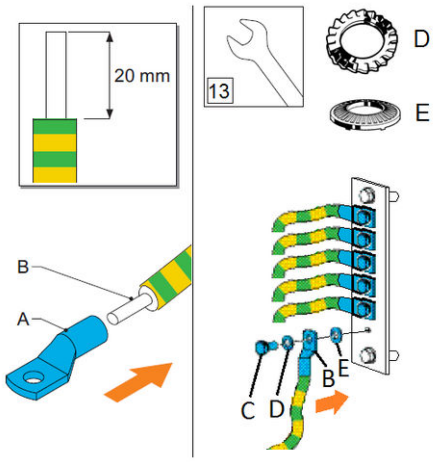

1. Cut the wire of the lighting protection cable to the correct length to reach the PE rail. Do not make the wire routing too tight, or too loose.
2. Strip 20 mm of the insulation from the end of the wire.
3. Attach a wire end ring (A) to the end of the lighting protection wire (B).
4. Remove the M8 bolt and washers from the lighting protection rail.
5. Fit the bolt (C) with toothed washer (C), the lighting protection wire (B) and contact washer (E).
6. Insert the bolt fitted with the lighting protection wire into the lighting protection connection.
7. Tighten the bolt with a tightening torque of 15 N·m.

5.17. Connect cables to ACS Control Module

	DANGER
	Make sure that the main switch of the power supply group for the product is set to the OFF position. Do a voltage check to make sure that the electrical power is disconnected from the system. Secure against resetting.

5.17.1. Gland layout of the ACS Control Module

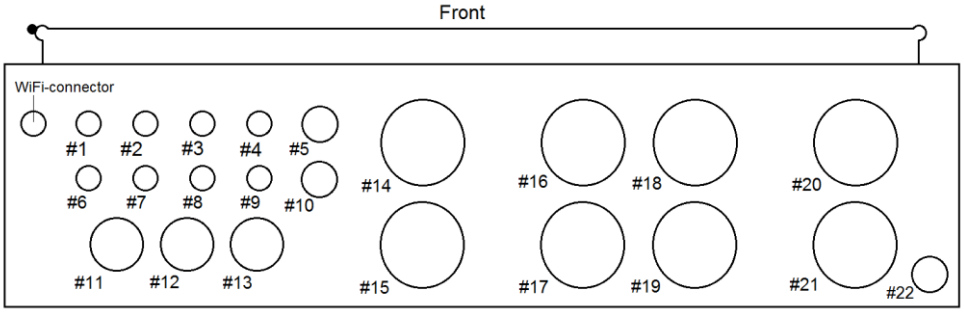

Gland #	Clamping range ØF	Cable
1	5 – 10 mm	AC utility power
2	5 – 10 mm	Pantograph heater
3	5 – 10 mm	Interlock
4	5 – 10 mm	Pantograph CP/PE
5	10 -17 mm	RFID Ethernet

6	5 – 10 mm	EMO switch
7	5 – 10 mm	Beacon
8	5 – 10 mm	Distance sensor
9	5 – 10 mm	Temperature sensor
10	10 -17 mm	RFID Power cable
11	13 – 21 mm	Communication (fibers)
12	13 – 21 mm	ACS Control
13	13 – 21 mm	PE
14	27 – 35 mm	DC+ In (from HVC 150, primary)
15	27 – 35 mm	DC+ In (from HVC 150S, secondary 1)
16	27 – 35 mm	DC+ Out (to pantograph)
17	27 – 35 mm	DC+ Out (to pantograph)
18	27 – 35 mm	DC+ Out (to pantograph)
19	27 – 35 mm	*Not used*
20	27 – 35 mm	DC+ In (from HVC 150S, secondary 2)
21	27 – 35 mm	*Not used*
22	10 – 17 mm	DC- OVP Sensing

5.17.2. Connect the DC+ power in- and output cables

Preconditions:

- Parts: 185/M12 tubular cable lug (2x, 4x or 6x[4]), heat-shrink red 2:1 Ø 25.4 mm.
- Tools: wire cutter, wire stripper, crimp pliers, spanner (size13 and 18), torque wrench (size 13 and 18).

	NOTICE
	Ensure that the DC cables during mounting do not hit the PCBAs on the door of the ACS Control Module. When these cables hit the PCBAs, the PBCAs can be damaged. It is advised to protect the PCBAs during mounting of the DC cables.

To prevent damage of the PCBAs in the ACS Control Module:

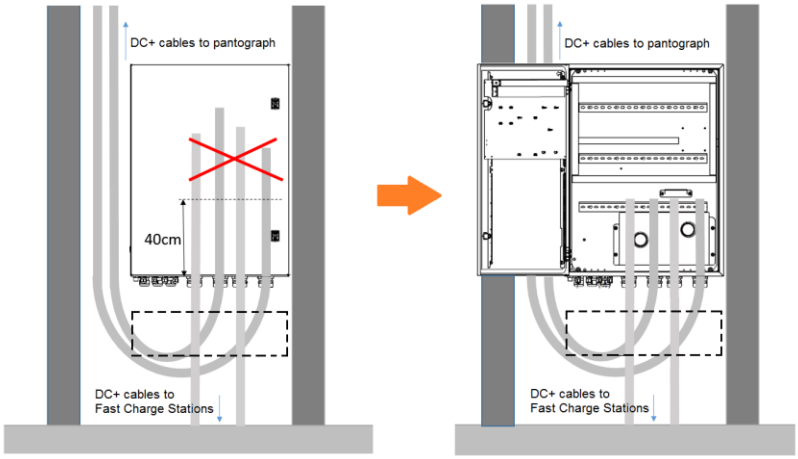

1. Cut the DC cables at 400 mm from the bottom side of the ACS Control Module.
2. Open the door of the ACS Control Module and check the required length.

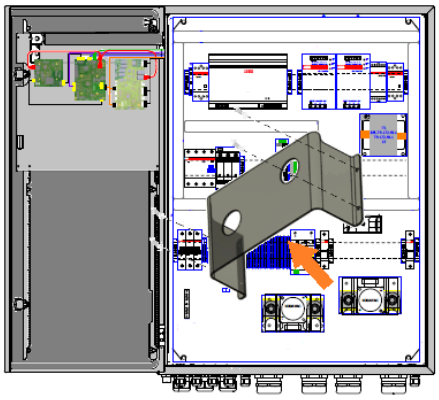

3. Remove the DC contactor’s protection cover.

[4] Depends on the charger system configuration, see section *Charge system configurations* on Page 45.

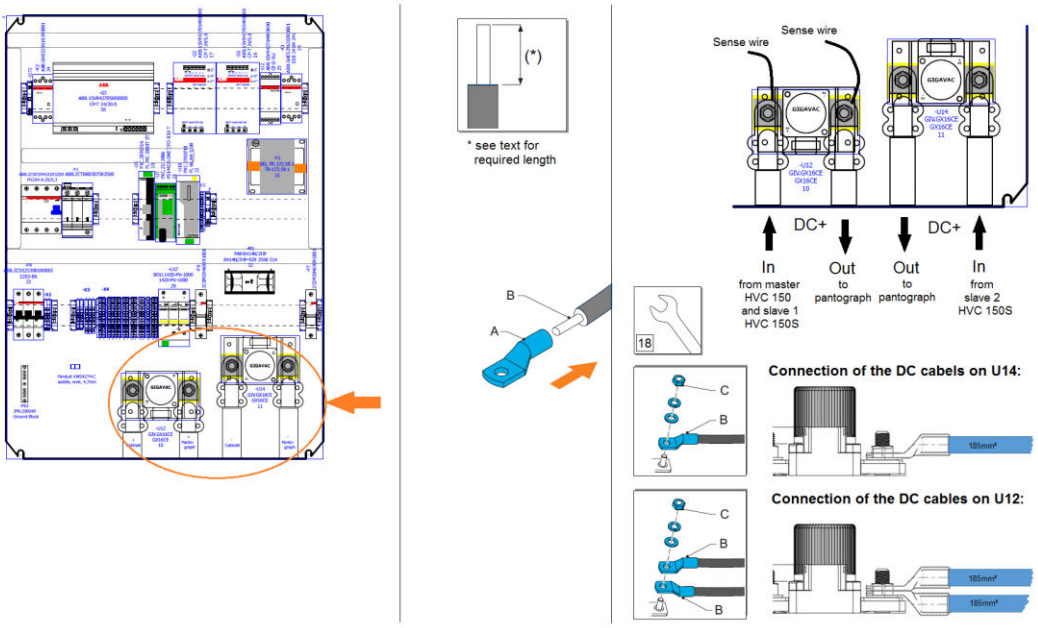

4. Loosen and remove the cable gland's (#14 - #18 and #20, depending on the system configuration see also *Charge system configurations* on Page 47) nuts, including the cover caps inside the gland, for the DC+ power cables.
5. Slide the cable gland's nuts over the DC+ power cables.
6. Insert the DC+ power cables into the right cable gland (#14 - #18 and #20, see picture above and section *Gland layout of the ACS Control Module* on Page 107).
7. Place 80 mm long heat-shrink (red on DC+ power cables).
8. Strip the insulation on the required length specified by the used lug from the end of the wire (B).
9. Attach cable lug (A) at the end of the wires and use the heat-shrink to cover the crimp connection.
10. Remove the nuts and washers (C) from the bolts of the DC contactor connectors.
11. **If present:** remove the sense wires from the bolts of the DC contactor connectors.
12. Insert the wires (B) onto the correct bolts of the DC contactor connectors, see picture above for the correct connection.
13. Insert the sense wires back onto the bolts of the DC contactor connectors.

	NOTICE
	Make sure that the sense wires are placed back on the DC contactor connectors. If this is not the case, then the system will not function.

14. Tighten the nuts (C) with a tightening torque of 30 N·m.

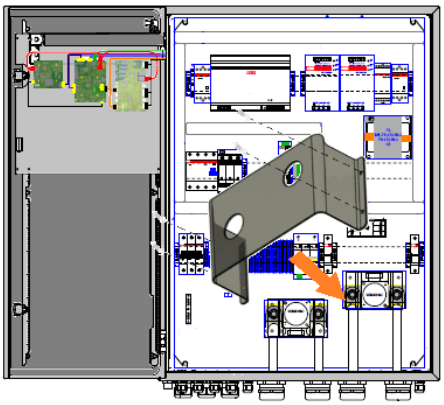

15. Place the protection cover back on the DC contactors.
16. Hand tighten the screws of the protection cover.
17. Tighten the cable gland's nut to secure the DC power cables.

5.17.3. Connect the DC- power in- and output cables in Junction Box

Preconditions:

- Parts: 185/M12 tubular cable lug (2x, 4x or 6x[5]), heat-shrink black 2:1 Ø 25.4 mm.
- Tools: wire cutter, wire stripper, crimp pliers, spanner (size18), torque wrench (size 18), cross-head screwdriver.

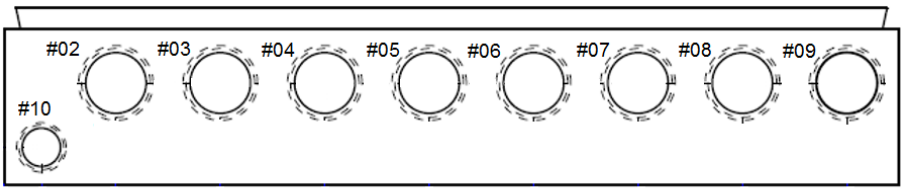

Bottom view

1. Loosen and remove the cable gland's (#03 - #08) nuts for the DC power cables.
2. Slide the cable gland's nuts over the DC power cables.
3. Insert the DC- input power cable(s) into the cable gland (#03, #04 and #05, see picture above).
4. Insert the DC- output power cables into the cable gland (#06, #07 and #08, see picture above).
5. Place 80 mm long heat-shrink (black on DC- power cables).
6. Strip the insulation on the required length specified by the used lug from the end of the DC power cables.

[5] Depends on the charger system configuration, see section *Charge system configurations* on Page 45.

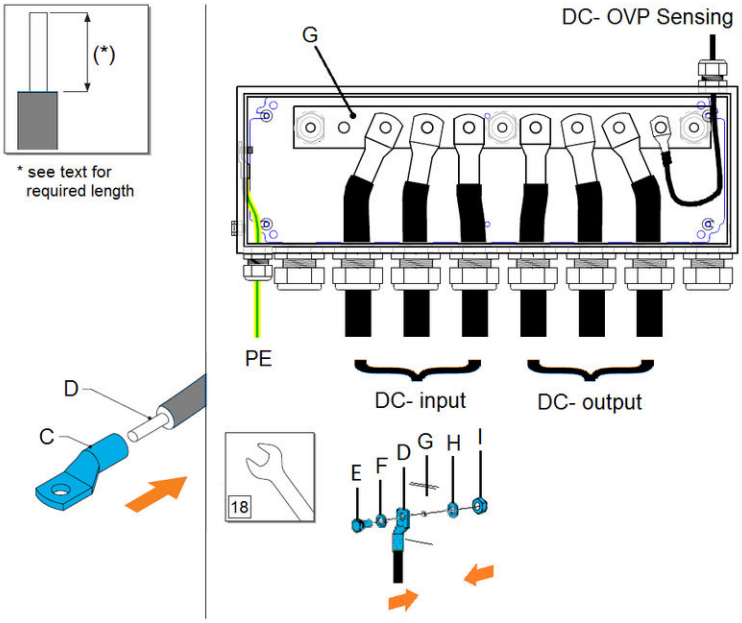

7. Attach cable lug (C) at the end of the wires (D) and use the heat-shrink to cover the crimp connection.
8. Remove the M12 bolts, washers and nuts from the bus-bar (G).
9. Fit the bolt (E) with flat washer (F) and the wire (D) (6x).
10. Insert the bolt fitted with the wire into the bus-bar (G) (6x).
11. Secure the bolt (E) onto the bus-bar (G) with the spring washer (H) and the nut (I) (6x).
12. Tighten the bolts (E) and nuts (I) with a tightening torque of 80 N·m.
13. Tighten the cable gland's nut to secure the DC power cables.

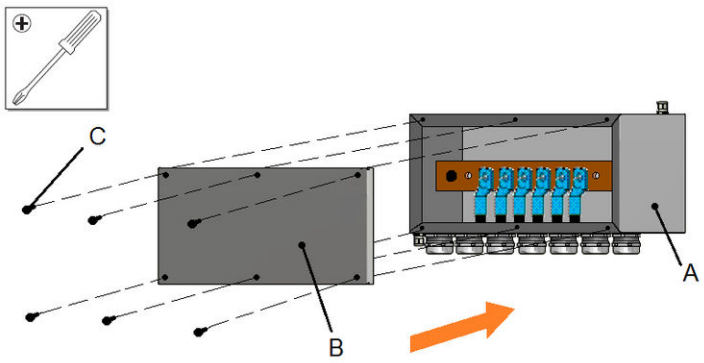

14. Place the cover (B) back onto the Junction Box (A).

	WARNING
	If the PE braided wire between the cover and cabinet is disconnected during the installation of the DC- power cables, make sure that the PE braided wire of the cover is electrically connected to the cabinet.

15. Tighten the screws (C) (6x) to secure the Junction Box.

5.17.4. Connect the DC- OVP Sensing wire from Junction Box

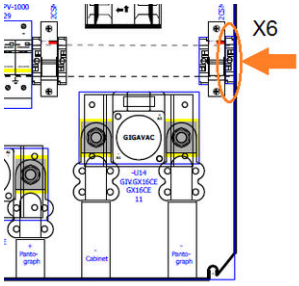

1. Loosen and remove the cable gland's (#22) nut for the DC- OVP Sensing wire.
2. Slide the cable gland's nut over the DC- OVP Sensing wire.
3. Route the DC- OVP Sensing wire through gland #22 to connector block X6.
4. Tighten the nut of the gland to secure the DC- OVP Sensing wire.
5. Loosen the connector screws of connector X6-2.
6. Insert the DC- OVP Sensing wire into the connector X6-2.
7. Tighten the connector screws of connector X6-2 with a tightening torque of 3.0 N·m.

5.17.5. Connect the AC utility power cable from Power Cabinet

Preconditions:

- Parts: 2.5 x 8 ferrule (4x).
- Tools: wire cutter, wire stripper, crimp pliers, screwdriver, crimp pliers.

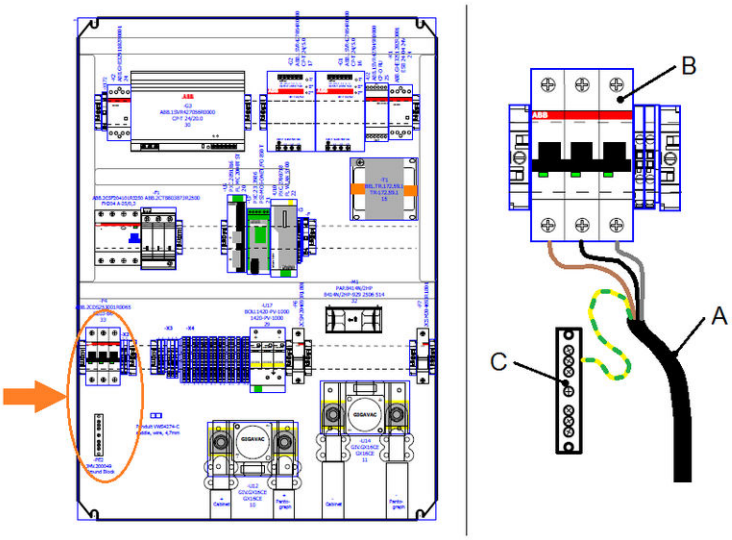

1. Loosen and remove the cable gland's (#1) nut for the AC utility power cable.
2. Slide the cable gland's nut over the AC utility power cable.
3. Route the AC utility power cable (A) through gland #1 to the circuit breaker (B), with sufficient cable length (do not make the cable routing too tight, or too loose).
4. Tighten the nut of the gland to secure the AC utility power cable.
5. Strip the insulation from the AC utility power cable (A).
6. Cut the wires of the AC utility power cable (A) to the correct lengths to reach the connectors. Make sure the PE wire is longer than the other wires.
7. Strip 11 mm of the insulation from the ends of the wires.
8. Crimp a ferrule onto the end of the wire.
9. Loosen the connector screws.
10. Insert the PE wire (green/yellow) into the one of the free connectors of GND-rail (C).

11. Tighten the connector screw of GND-rail (C).
12. Insert the other 3 wires into the connectors of circuit breaker (B).
    - From left to right:
      L1 (brown),
      L2 (black),
      L3 (grey).
13. Tighten the connector screws of circuit breaker (B) with a tightening torque of 3.0 N·m.

5.17.6. Connect the communication cable from the Power Cabinet

1. Loosen and remove the cable gland's (#11) nut for the communication cable.
2. Remove the rubber seal inside the cable gland (#11).

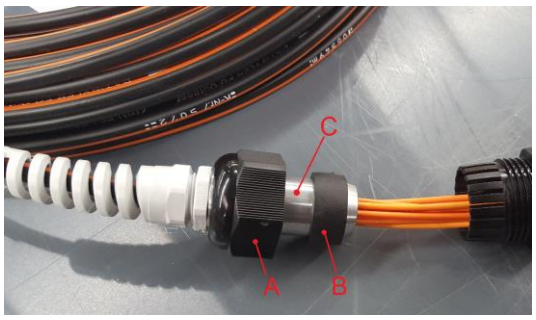

3. Slide the cable gland's nut (A) over the metal finish tulle (C) of the communication glass fiber cable.
4. Slide the cable gland's rubber seal (B) over the metal finish tulle (C) of the communication glass fiber cable.

	CAUTION
	To prevent damage to the glass fiber communication cable, always slide the cable gland's rubber seal over the metal finish tulle before insert the glass fiber communication cable into the cable gland.

5. Insert the communication cable into the cable gland (#11) and tighten the cable gland's nut to secure the cable.

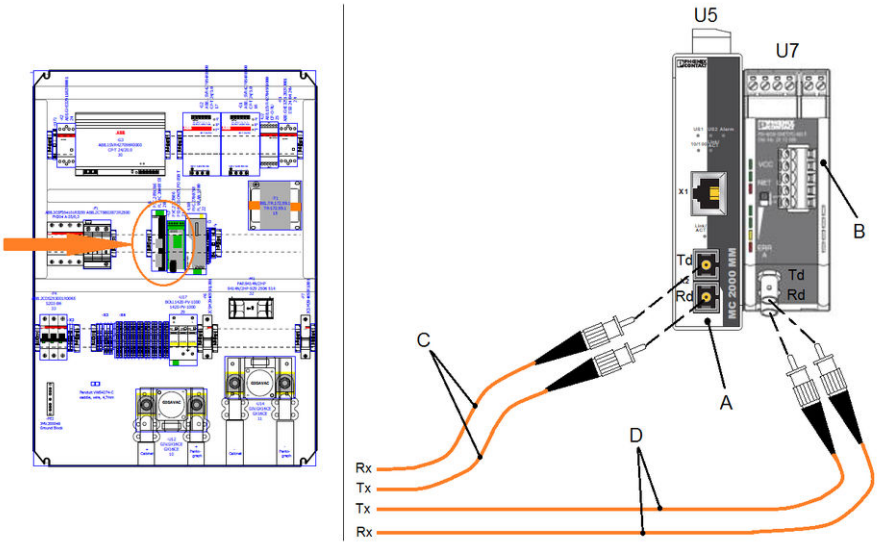

6. Route the communication fiber cables to module U5 (A) and U7 (B).
7. Remove the protection covers from the optical connectors.
8. Connect the two Ethernet fiber cables (C) onto module (A):
   - Rx with Td U5;
   - Tx with Rd U5.
9. Connect the two CAN bus fiber cables (D) onto module (B):
   - Rx with Td U7;
   - Tx with Rd U7.

	NOTICE
	Four fiber cables are not connected. Those fiber cables are meant for spare.

10. Bind the cables together and secure the loops loosely with a piece of tak-ty or ty-rap.

	CAUTION
	Make the loop bend radius of the fiber cables not smaller than 64 mm, otherwise the core of the fiber cable may break.

5.17.7. Connect the WiFi cable

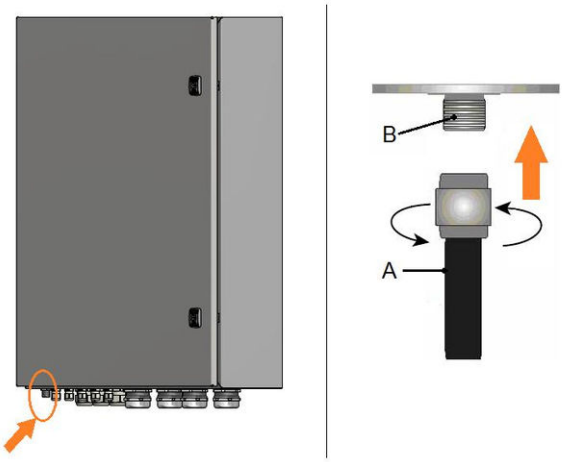

1. Route the WiFi cable (A) to the WiFi connector (B).
2. Insert the WiFi type N-plug into the WiFi connector (B).
3. Hand tighten the WiFi plug.

	NOTICE
	Make sure that the WiFi cable (A) meets conditions mentioned in the notice of paragraph 5.13.6.

5.17.8. Connect the RFID cables

	NOTICE
	This section is not required if the RFID module is not present.

Preconditions:

- Parts: 0.25 x 6 ferrule (2x), heat-shrink 2:1 Ø 12.7 mm.
- Tools: wire cutter, wire stripper, crimp pliers, screwdriver.

1. Loosen and remove the cable gland's (#5 and #10) nuts for the RFID Ethernet and the RFID Power cables respectively.
2. Slide the cable gland's nuts over the RFID Ethernet and RFID Power cable.

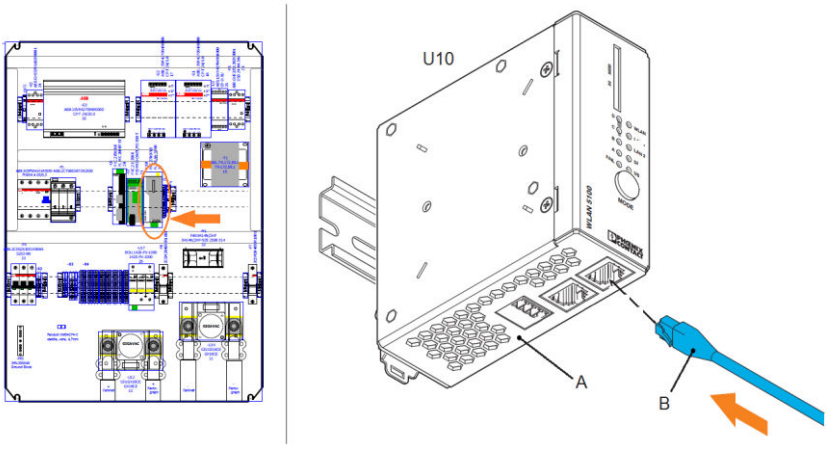

3. Route the RFID Ethernet cable through gland #5 to module U10 (A).
4. Insert the RJ45 connector (B) of the Ethernet cable into the Ethernet port X2 of module U10 (A)
5. Tighten the nut of the gland to secure the RFID Ethernet cable.

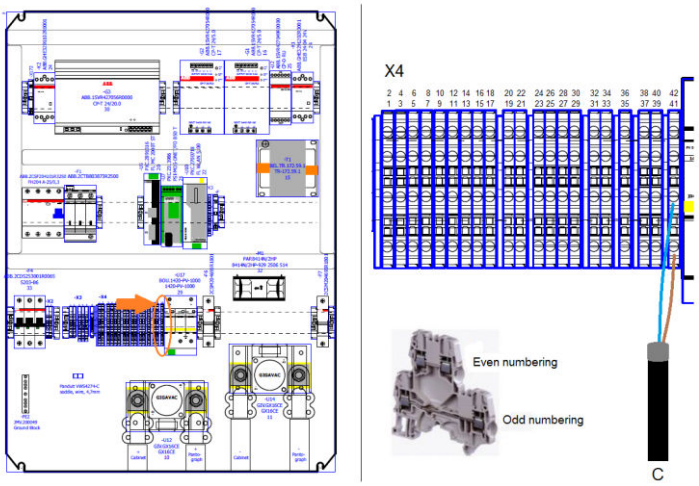

6. Route the RFID Power cable (C) through gland #10 to connector block X4, with sufficient cable length (do not make the cable routing too tight, or too loose).

7. Tighten the nut of the gland to secure the RFID Power cable.

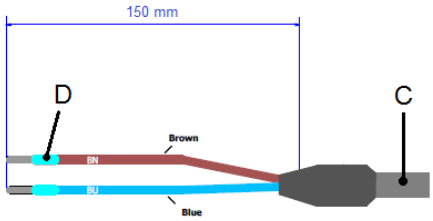

8. Strip 150 mm insulation from the cable (C).
9. Place a 40 mm long heat-shrink at the end of the cable (C).
10. Strip 11 mm of the insulation from the ends of **only the Brown and Blue wire!**
11. Crimp the ferrules (D) onto the end of the Brown and Blue wire.
12. Cut the other wires, **except the Brown and Blue wire**, at the end of the striped insulation of the cable and shrink the heat-shrink (see picture above).
13. Loosen the connector screws.
14. Insert the wires into the correct connectors, see table below:

Functional description	Connector	Wire color
24 V RFID	X4-41	Brown
GND RFID	X4-42	Blue

15. Tighten the connector screw with a tightening torque of 1.3 N·m.

5.17.9. Connect the other cables to the ACS Control Module

Preconditions:

- Parts: 0.5 x 8 ferrule (8x), 1.5 x 8 ferrule (6x), 2.5 x 8 ferrule (11x).
- Tools: wire cutter, wire stripper, crimp pliers, screwdriver.

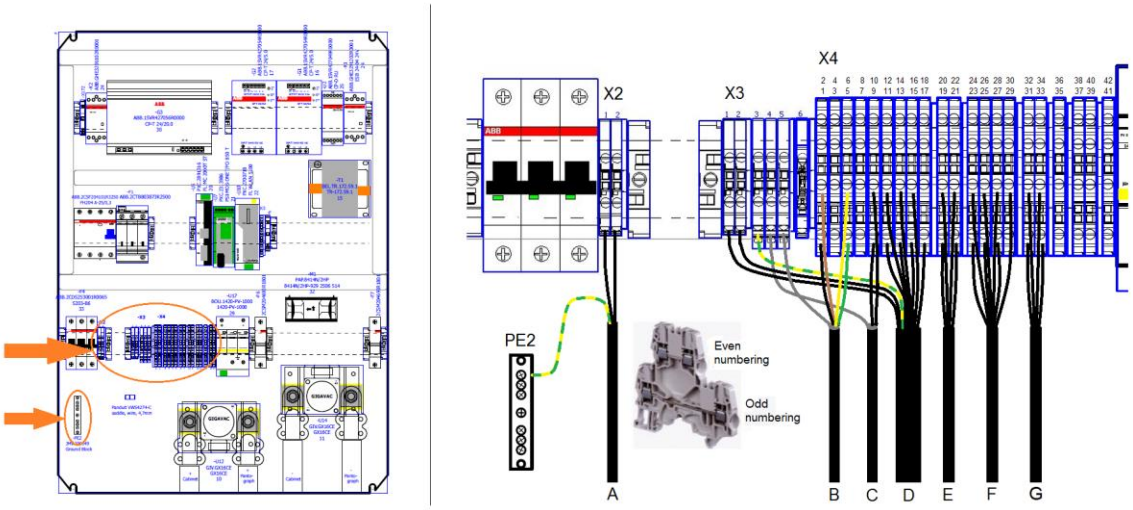

Overview of the terminal block

A	ACS heater cable	D	ACS Control cable
B	Interlock cable	E	EMO cable
C	ACS CP/PE cable	F	Beacon cable

1. Loosen and remove the cable gland's nuts (see for overview *Gland layout of the ACS Control Module* in Page 107) for the cables.
2. Slide the cable gland's nut over the cables.

3. Route the cables through the right glands to the connector blocks (X2, X3 and X4), with sufficient cable length (do not make the cable routing too tight, or too loose).
4. Tighten the nuts of the glands to secure the cables.
5. Strip the insulation from the cables.
6. Cut the wires of the cables to the correct lengths to reach the connectors
7. Strip 11 mm of the insulation from the ends of the wires.
8. Crimp a ferrule onto the end of the wire.
9. Loosen the connector screws.
10. Insert the PE wire from the Pantograph heater cable into the one of the free connectors of GND-rail (PE2).
11. Tighten the connector screw of GND-rail (PE2).
12. Insert the other wires into the correct connectors, see table below:

X2		**ACS heater cable**	
1		Wire 1	ACS L Heater
2		Wire 2	ACS N Heater
PE2		GND (green/yellow)	GND
X3	X4	**Interlock cable**	
4		Shield	GND
	1	White	Ext Interlock In
	2	Brown	Ext Interlock Out
	5	Green	DC Guard A
	6	Yellow	DC Guard GND
X3	X4	**ACS CP/PE cable**	
4		Shield	GND
	9	Wire 1	CP
	10	Wire 2	PE
X3	X4	**ACS Control cable**	
1		Wire 1	ACS +24V
2		Wire 2	ACS -24V
3		GND (green/yellow)	GND
	11	Wire 3	ACS Extend/Retract Out
	13	Wire 4	ACS Supply/Retract Out
	14	Wire 5	ACS Retracted In
	16	Wire 6	ACS GND_B
	17	Wire 7	ACS Extended In
X4		**EMO cable**	
19		Wire 1	EMO S1
20		Wire 2	EMO S1
21		Wire 3	EMO S2
22		Wire 4	EMO S2
X4		**Beacon/Sensor cable**	
23		Wire 1	AUX1_Out
24		Wire 2	AUX2_Out
25		Wire 3	AUX3_Out
27		Wire 4	+24V

13. Tighten the connector screws with a tightening torque of 1.3 N·m.

5.18. Close the door of the ACS Control Module

Preconditions:

- Key

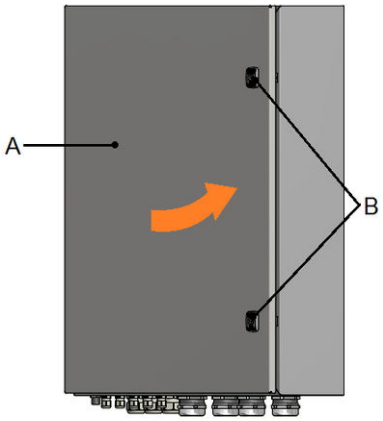

1. Close the door (A).
2. Close the locks (B).

5.19. Mounting the emergency unit

The emergency unit (EMO) must be placed on an easily accessible position for the operator.

	NOTICE
	The emergency button EMO does not disconnect the whole system from the mains voltage! This emergency button disconnect only the DC voltage lines, the control of the charger are still operational.

1. Mount the emergency unit with M4 bolts, washers and nuts on a wall or construction (location depended).
2. Route the EMO cable to the emergency unit.

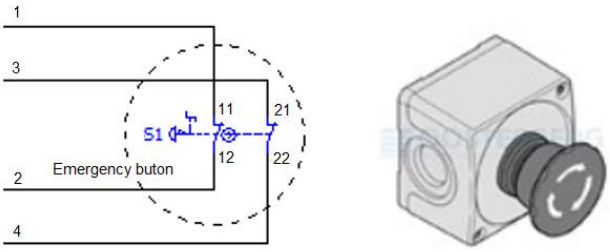

3. Connect the EMO cable to the switch, see picture above for the connection diagram.

5.20. Mounting the beacon

It is advisable to mount the beacon for the operator to a visible location.

1. Mount the beacon on a wall or construction (location depended), see for mounting option section *Charger state indicator light (beacon)* on Page 22.
2. Route the Beacon cable to the beacon.

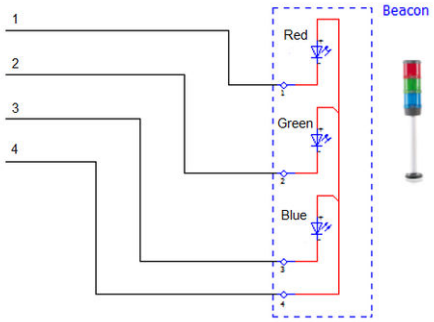

3. Connect the Beacon cable to the beacon light units, see picture above for the connection diagram.

6. Commissioning

6.1. Commissioning preparation

Commissioning is the last phase necessary to get the HVC-PD Depot E-Bus Charger into operation.
The planning steps for the commissioning phase are shown in the figure below.

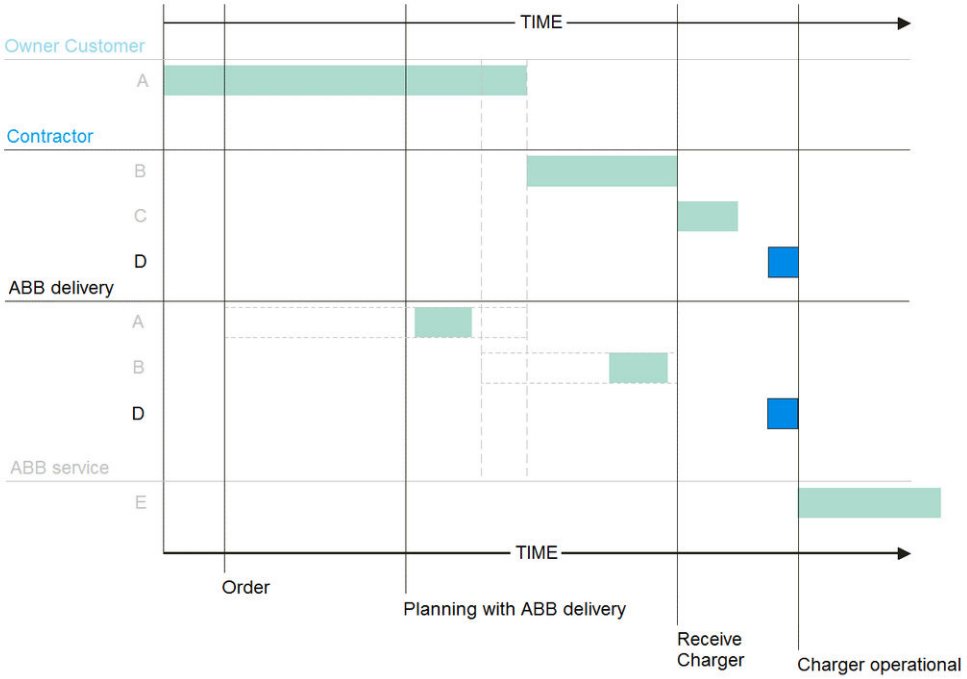

D **Commissioning**
The commissioning of the HVC-PD Depot E-Bus Charger need to be performed by a service engineer from the ABB Delivery department and/or a certified local ABB service engineer. Both will need the support from the local contractor.
Before the service engineer can start, the following conditions must be met:

- All installation work is done.
- Grid power is available.
- A local technician is present for assistance and to switch the power on.
- An electric or hybrid bus available to perform the functional tests.

	CAUTION
	**Warranty** It is not permitted to move the whole or parts of the HVC-PD Depot E-Bus Charger after the commissioning. If the whole or parts of the HVC-PD Depot E-Bus Charger is moved without contacting the ABB Service department, the warranty will be considered void.

6.2. Customer Acceptance Form (CAF)

After the commissioning is completed, the owner / site operator will sign the Customer Acceptance Form (CAF). In certain circumstances ABB will be represented by a project engineer.

The CAF contains information about:

- the project (number, location, charger type),
- a checklist about the delivery,
- the commissioning SAT checklist,
- list of remaining items.

After the CAF has been signed, the customer support will be handled by the ABB Service department.
If there are any remaining items, they can be noted on the CAF document, together with the agreed solution and the expected date of completion.

7. Service and Maintenance

7.1. About Service and Maintenance

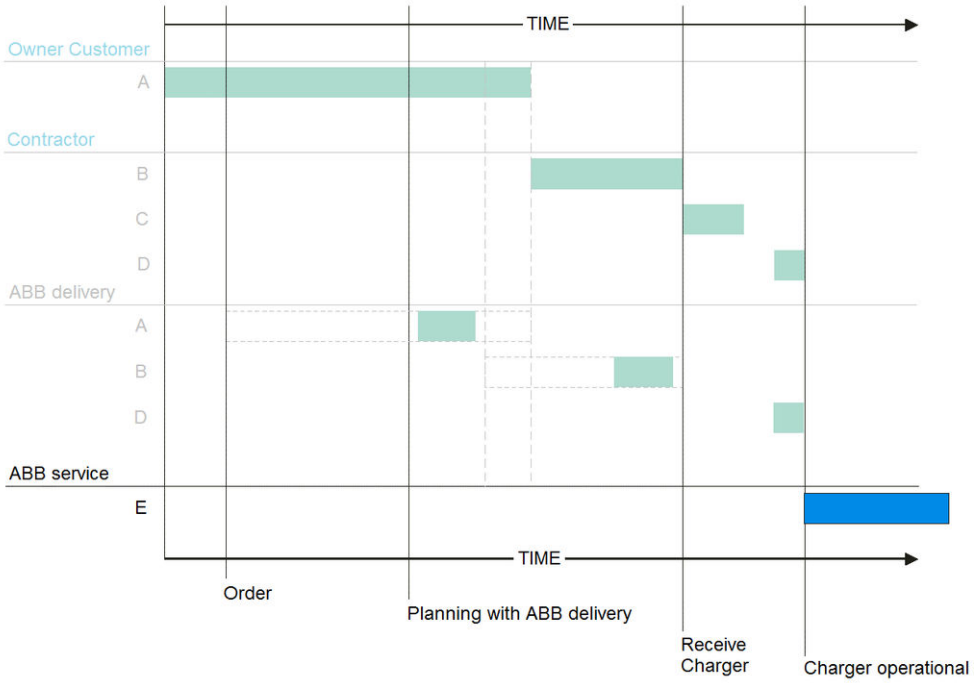

E **Service and Maintenance**
Maintenance is done according the maintenance schedule. This is outside of the scope of this document.

	DANGER
	Any service and maintenance work on pantograph and or charger system has to be only executed on powered-off device. Make sure that the main switch of the power supply group for the product is set to the OFF position. Do a voltage check to make sure that the electrical power is disconnected from the system. Secure against resetting.

7.2. Cleaning of the cabinet

The Power Cabinet and ABB Pole is powder coated. This coating must be kept in good condition. Clean the Power Cabinet and ABB Pole three times a year in the following way:

- Remove rough dirt by spraying with low-pressure tap water.
- Apply a neutral or weak alkaline cleaning solution and let it soak.
- Remove dirt by hand with a non-woven nylon hand pad.
- Rinse thoroughly with tap water.
- Optionally, apply wax on the front for extra protection and gloss.
- Do a check on the coating for damage.

	**NOTICE** When the HVC-PD Depot E-Bus Charger is exposed to rain, it is sufficient to clean it twice a year.
	**CAUTION** Do not apply high-pressure water jets. Water may leak into the Power Cabinet. If a high-pressure water jet has been used, make sure that the inside of the Power Cabinet is dry. - Only use cleaning agents with a pH value between 6 and 8. - Do not use cleaning agents with abrasive components. - Do not use abrasive tools.

8. Technical Specification

8.1. Electrical specification complete 150 kW system

Input	
Supply voltage	3-phase, 400 V AC: PE, L1, L2, L3
Input voltage range	400 V AC ± 10%
Input frequency range	50 Hz ± 4%
Maximum power dissipation	174 kVA
Power factor (cos φ)	≥ 0.95
Standby power consumption	60 W for 1x HVC cabinet 30 W for the ACM
Efficiency	94% and 96% in power spectrum between 20% and 100% of full power
Maximum input current	265 A AC
Nominal input current	238 A AC
Earth Leakage Current Protection	AC 300 mA (RCD integrated in HVC150(S)) AC 30 mA (RCD integrated in ACS Control Module)
Short Circuit Capacity	25 kA
AC power connection	240 mm^2 (max)
DC output	
Maximum output power	150 kW
Output voltage range	150 – 850 V DC
Maximum output current	250 A DC

8.2. Electrical specification complete 300 kW system

Input	
Supply voltage	3-phase, 400 V AC: PE, L1, L2, L3
Input voltage range	400 V AC ± 10%
Input frequency range	50 Hz ± 4%
Maximum power dissipation	348 kVA
Power factor (cos φ)	≥ 0.95
Standby power consumption	120 W for 2x HVC cabinets 30 W for the ACM
Efficiency	94% and 96% in power spectrum between 20% and 100% of full power
Maximum input current	530 A AC
Nominal input current	476 A AC
Earth Leakage Current Protection	AC 300 mA (RCD integrated in HVC150(S)) AC 30 mA (RCD integrated in ACS Control Module)
Short Circuit Capacity	25 kA
AC power connection	240 mm^2 (max) (in both HVC 150 and 150S)
DC output	
Maximum output power	300 kW
Output voltage range	150 – 850 V DC
Maximum output current	500 A DC

8.3. Electrical specification complete 450 kW system

Input	
Supply voltage	3-phase, 400 V AC: PE, L1, L2, L3
Input voltage range	400 V AC ± 10%
Input frequency range	50 Hz ± 4%
Maximum power dissipation	520 kVA
Power factor (cos φ)	≥ 0.95
Standby power consumption	180 W for 3x HVC cabinets 30 W for the ACM
Efficiency	94% and 96% in power spectrum between 20% and 100% of full power
Nominal input current	713 A AC
Maximum nominal input current	792 A AC
Earth Leakage Current Protection	AC 300 mA (RCD integrated in HVC150(S)) AC 30 mA (RCD integrated in ACS Control Module)
Short Circuit Capacity	25 kA
AC power connection	240 mm^2 (max) (in both HVC 150 and 150S)
DC output	
Maximum output power	450 kW
Output voltage range	150 – 850 V DC
Maximum output current	600 A DC

8.4. Mechanical data

Mechanical specification Power Cabinet

Dimensions (H x W x D)	2092 x 1170 x 770 mm (including swivel eye bolts)
Weight	1340 kg
Volume	1.87 m^3
Dimensions including packaging (H x W x D)	2250 x 1200 x 800 mm
Weight including packing	1400 kg
Weight concrete foundation	1300 kg
Mechanical impact protection	IK10
Housing	Stainless steel 430

Mechanical specification ACS Control Module/Junction Box

Dimensions ACM (H x W x D)	841.5 x 610.6 x 220.0 mm
Dimension Junction Box (H x W x D)	280.0 x 606.0 x 124.0 mm
Weight ACM	49.0 kg
Weight Junction Box	10.5 kg
Volume ACM	0.10 m^3
Volume Junction Box	0.015 m^3
Dimensions including packaging (H x W x D)	400.0 x 1010.0 x 750.0 mm
Weight including packing	66.5 kg
Mechanical impact protection	IK10
Housing	Painted steel

Mechanical specification Pantograph

Dimensions footprint (W x D)	2011 x 899 mm
Height	474 mm (in standby mode)
Weight	180 kg ± 5 kg
Static contact force	30 N – 200 N
Load force spindle drive	4500 N (dynamic), 18000 N (static)
Frame	Steel
Collector head guidance	Aluminum-allow / stainless steel
Collector head	Steel / copper

8.5. Environment

Environment specification Power Cabinet

Ingression protection	IP54
Temperature range – Operation	-35 ºC to +45 ºC
Temperature range – Storage	-10 ºC to +70 ºC
Humidity	5 % to 95 %, RH – non-condensing
Airflow	1450 m^3/h
Pressure drop	300 pA
Altitude	2000 m (max.)
Storage conditions	Indoors, dry

Environment specification ACS Control Module/Junction Box

Ingression protection	IP65
Temperature range – Operation	-35 ºC to +60 ºC
Temperature range – Storage	-10 ºC to +75 ºC
Humidity	5 % to 95 %, RH – non-condensing
Altitude	2000 m (max.)
Storage conditions	Indoors, dry

Environment specification Pantograph

Ingression protection	IP65
Temperature range – Operation	-40 ºC to +45 ºC
Temperature range – Storage	-10 ºC to +70 ºC
Storage conditions	Indoors, dry



CAUTION

Warranty
Warranty will be considered void when the HVC-PD E-Bus Charger is damaged while badly stored at the customer's location.

8.6. Certifications

Certifications for complete system

CE	Certificate number pole: 2388-CPR-0044
	Declaration of Conformity HVC150: 20160609
Class of protection	1 with PE connection

9. **Appendix**

A	Dimensions Power Cabinet	129
B	Dimensions ACS Control Module	131
C	Dimensions Junction Box	132
D	Dimensions Pantograph	133
E	Dimensions Pantograph mounting brackets	134
F	Dimensions Concrete Foundation Power Cabinet	136
G	Dimensions Metal Foundation Power Cabinet	138
H	Power Cabinet – Outline with Foundation	139
I	Signal connection diagram	140
J	Ground overview of the system	143
K	WEEE disposal – 2012-19/EU	144

A. Dimensions Power Cabinet

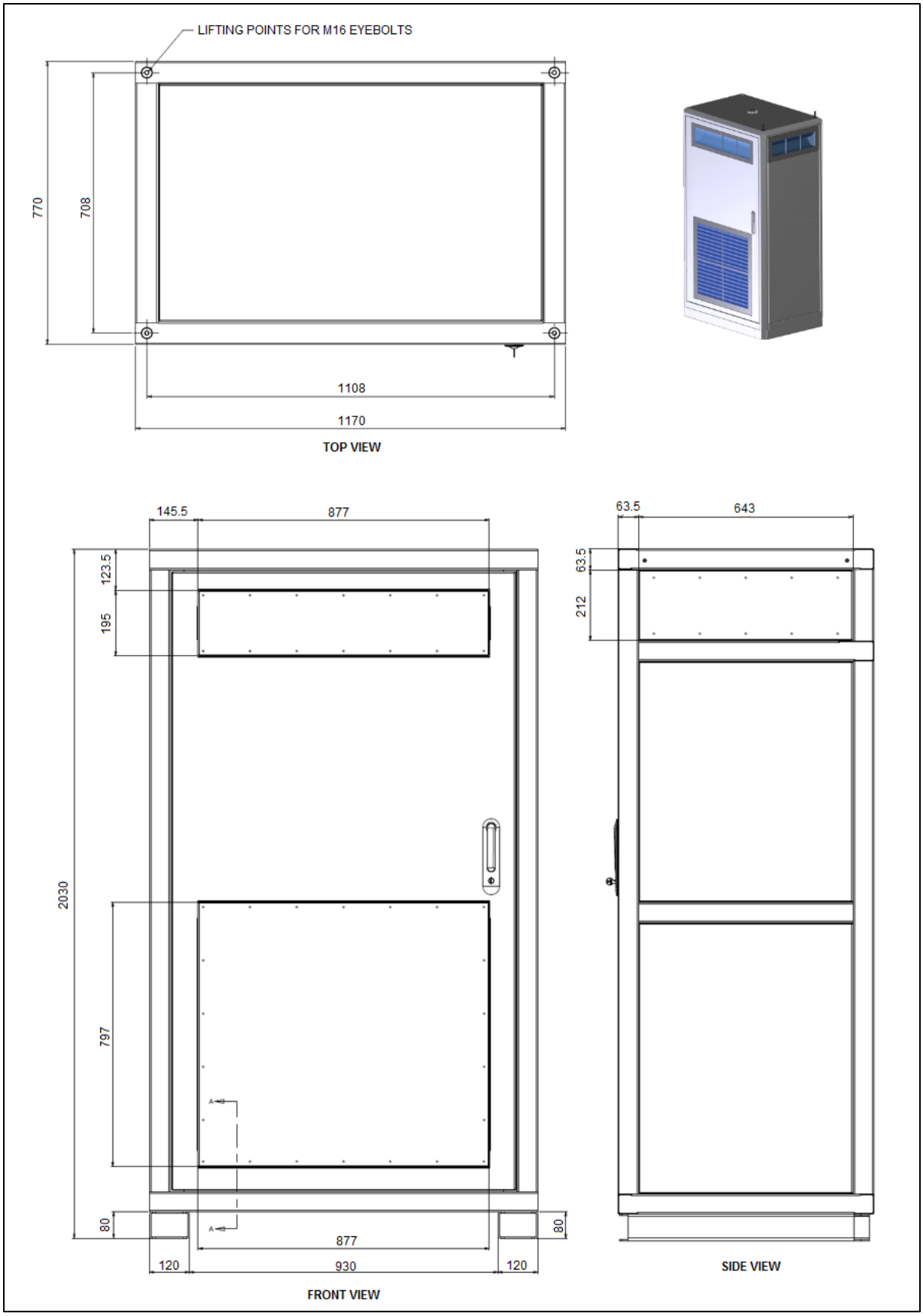

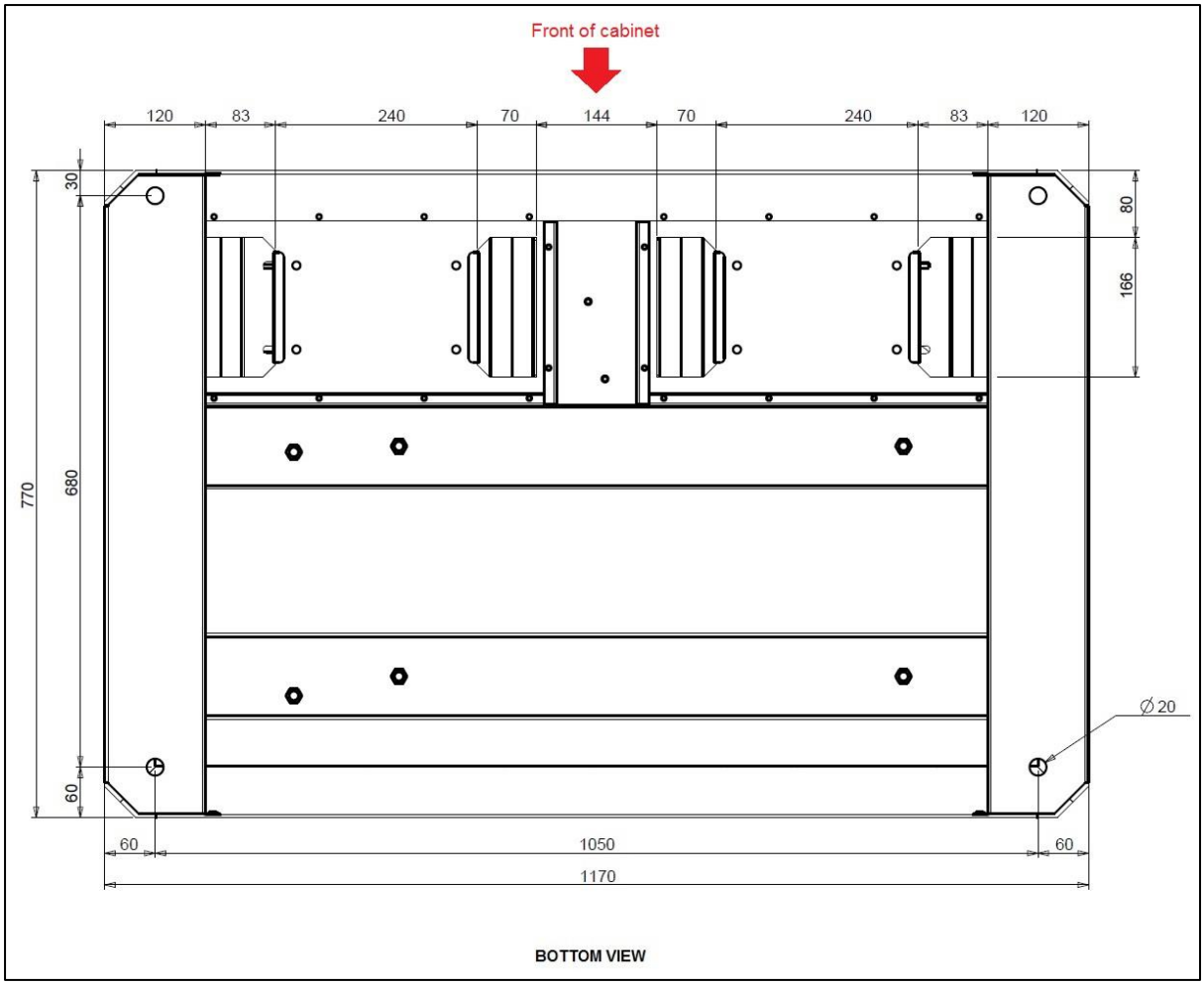
Front of cabinet
120
83
240
70
144
70
240
83
120
30
80
166
770
680
60
Ø 20
60
1050
60
1170

BOTTOM VIEW

B. Dimensions ACS Control Module

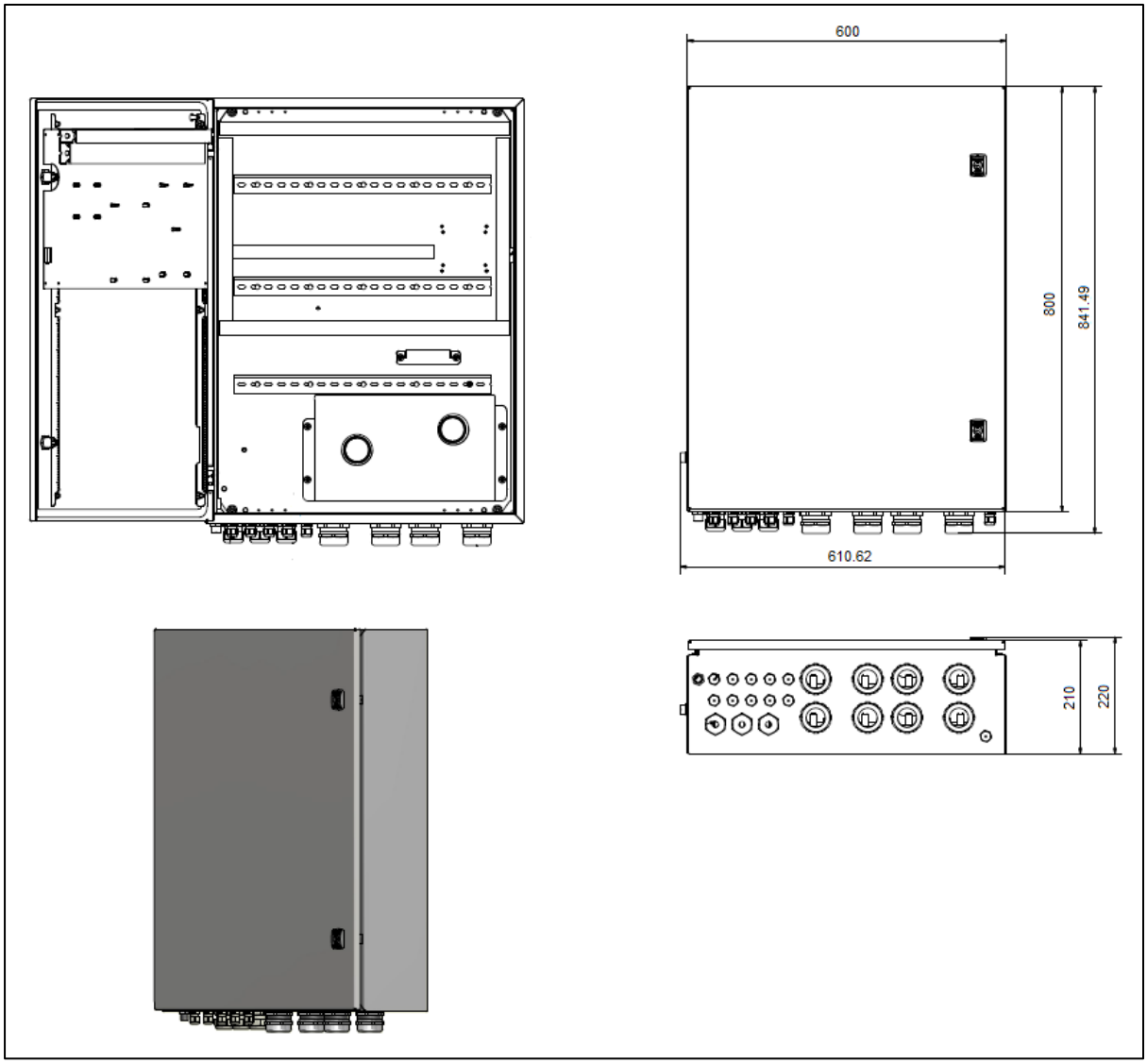

C. Dimensions Junction Box

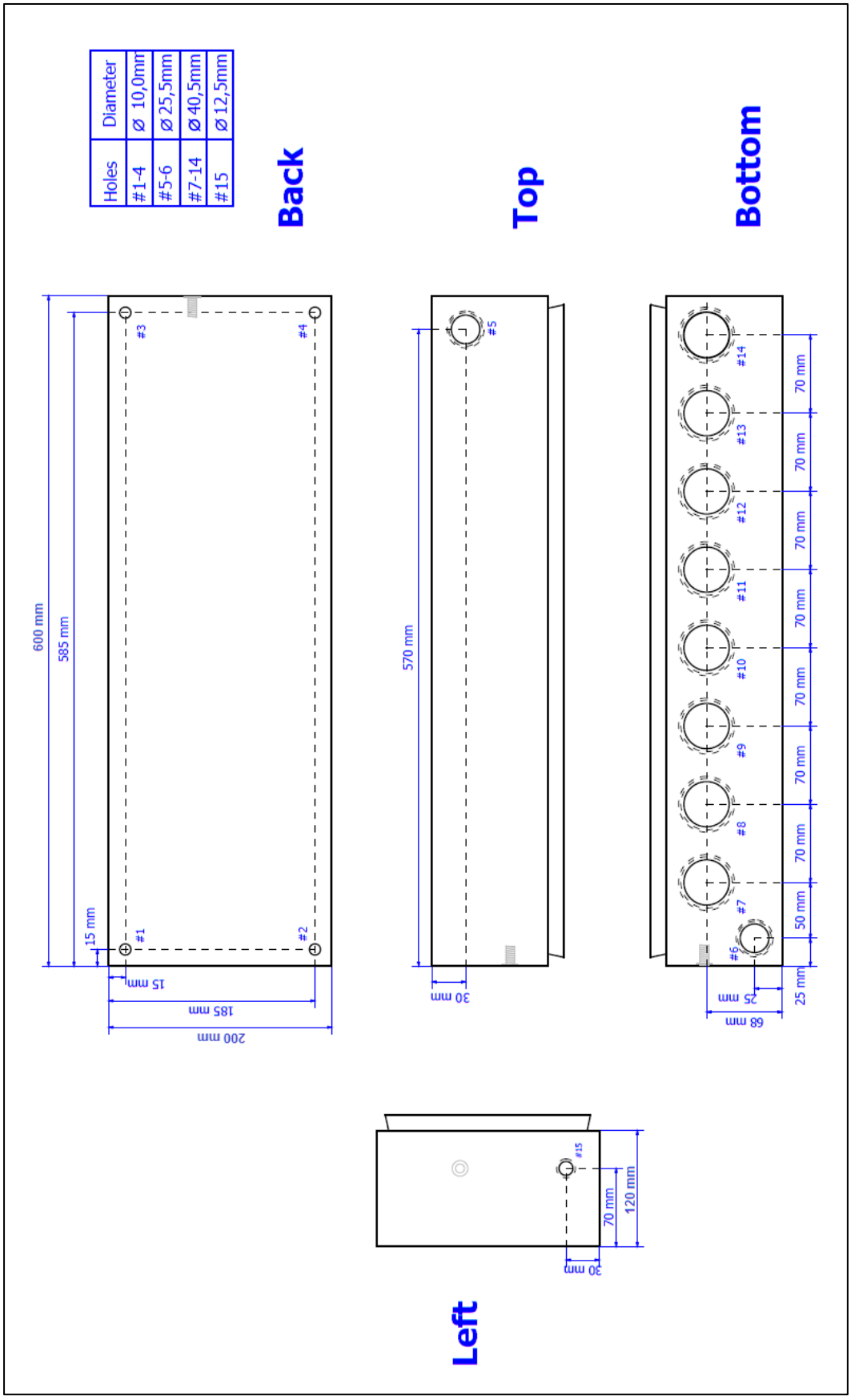

D. Dimensions Pantograph

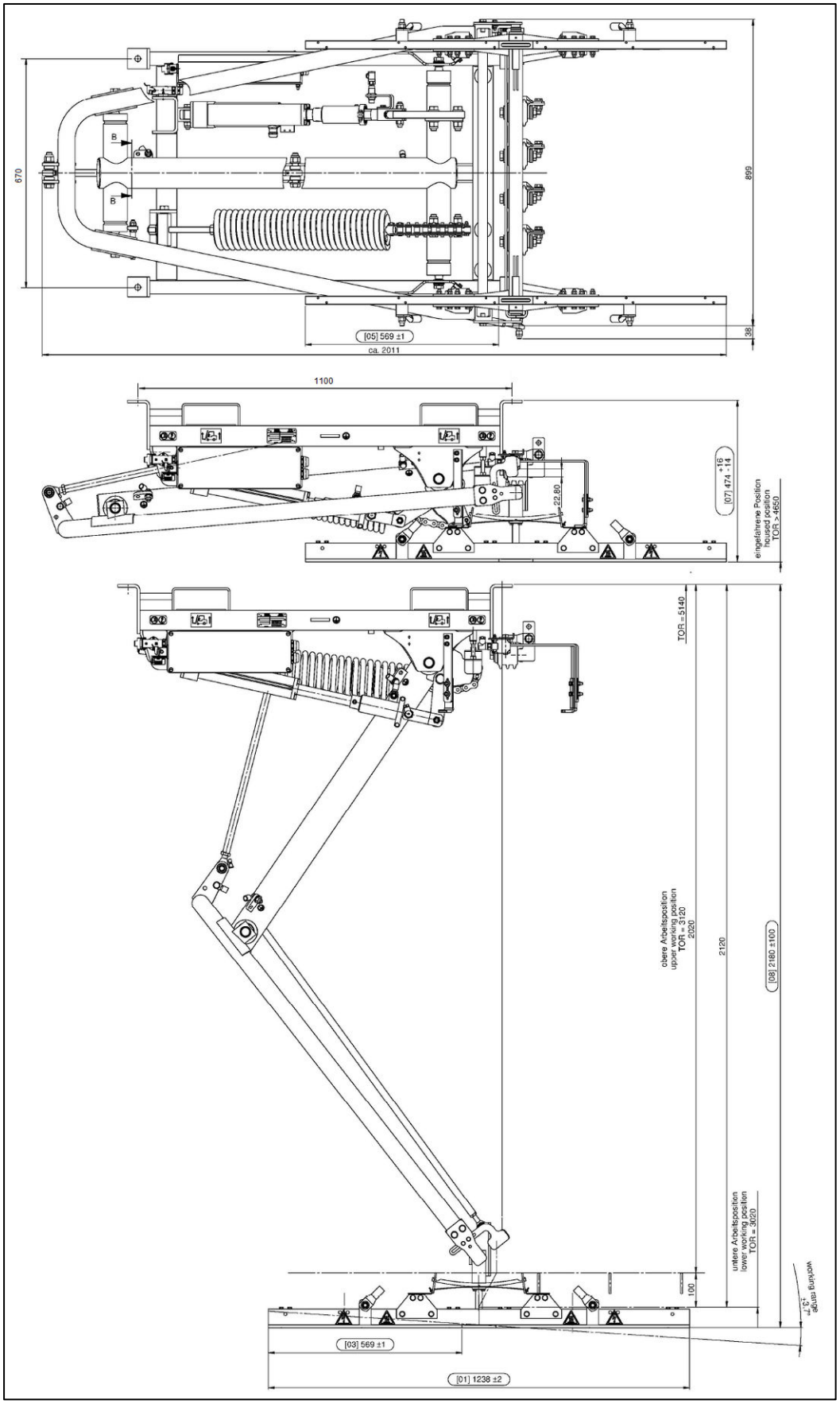

E. Dimensions Pantograph mounting brackets

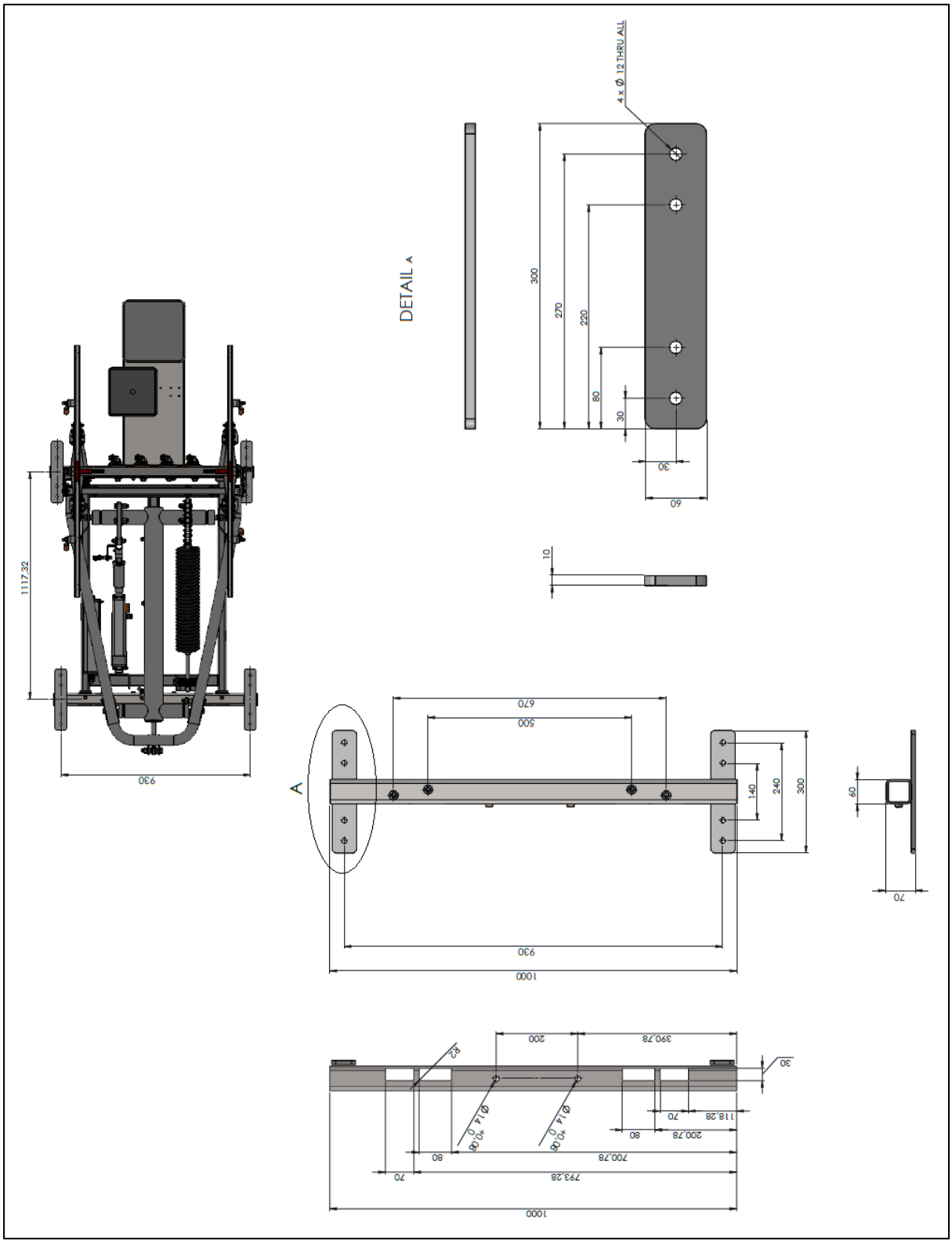

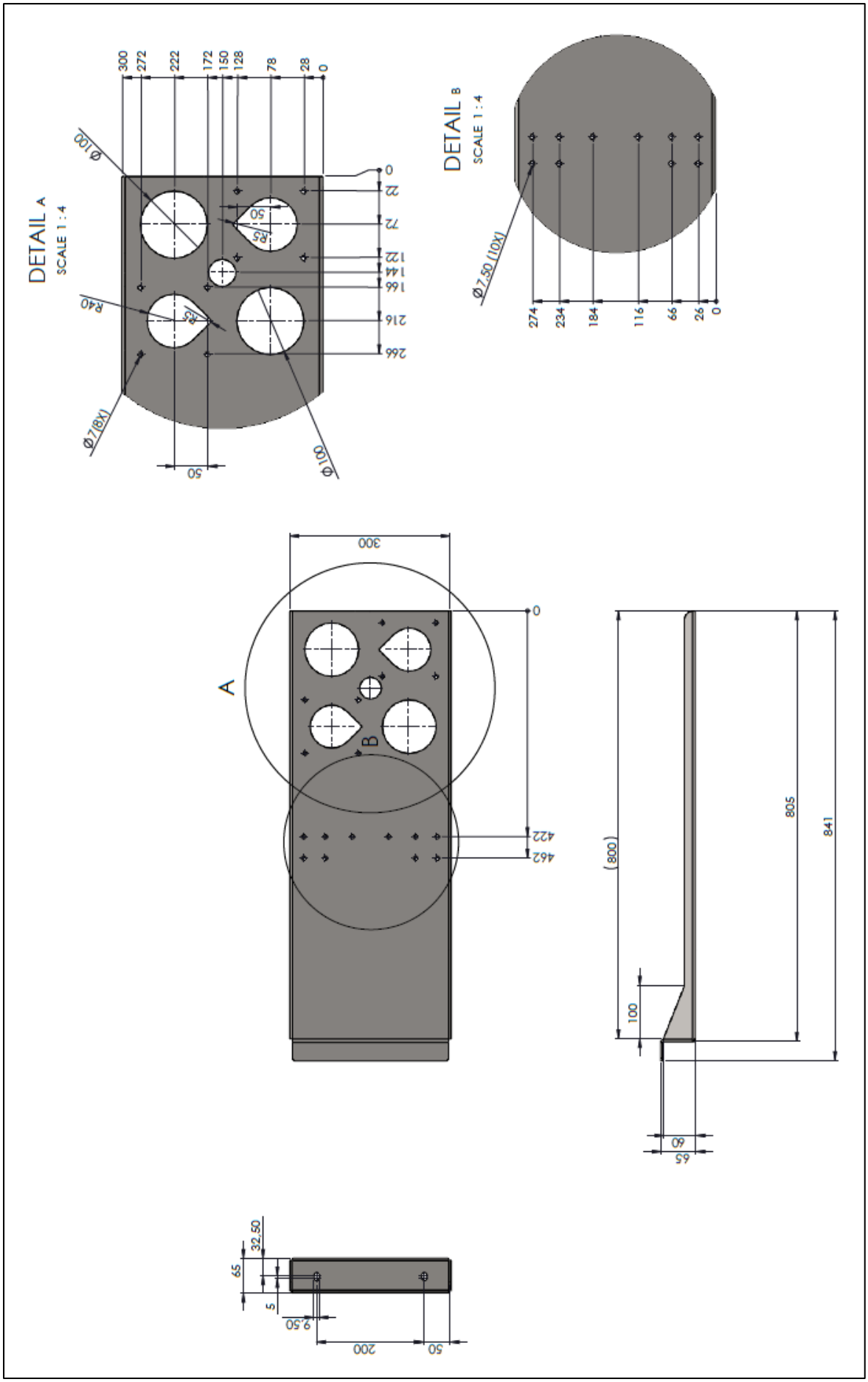
DETAIL A
SCALE 1 : 4
DETAIL B
SCALE 1 : 4
300
272
222
172
150
128
78
28
0
Ø100
R40
R5
Ø7(8X)
Ø7,50 (10X)
274
234
184
116
66
26
22
72
122
144
166
216
266
50
A
B
422
462
(800)
805
841
100
60
65
32,50
5
9,50
200

F. Dimensions Concrete Foundation Power Cabinet

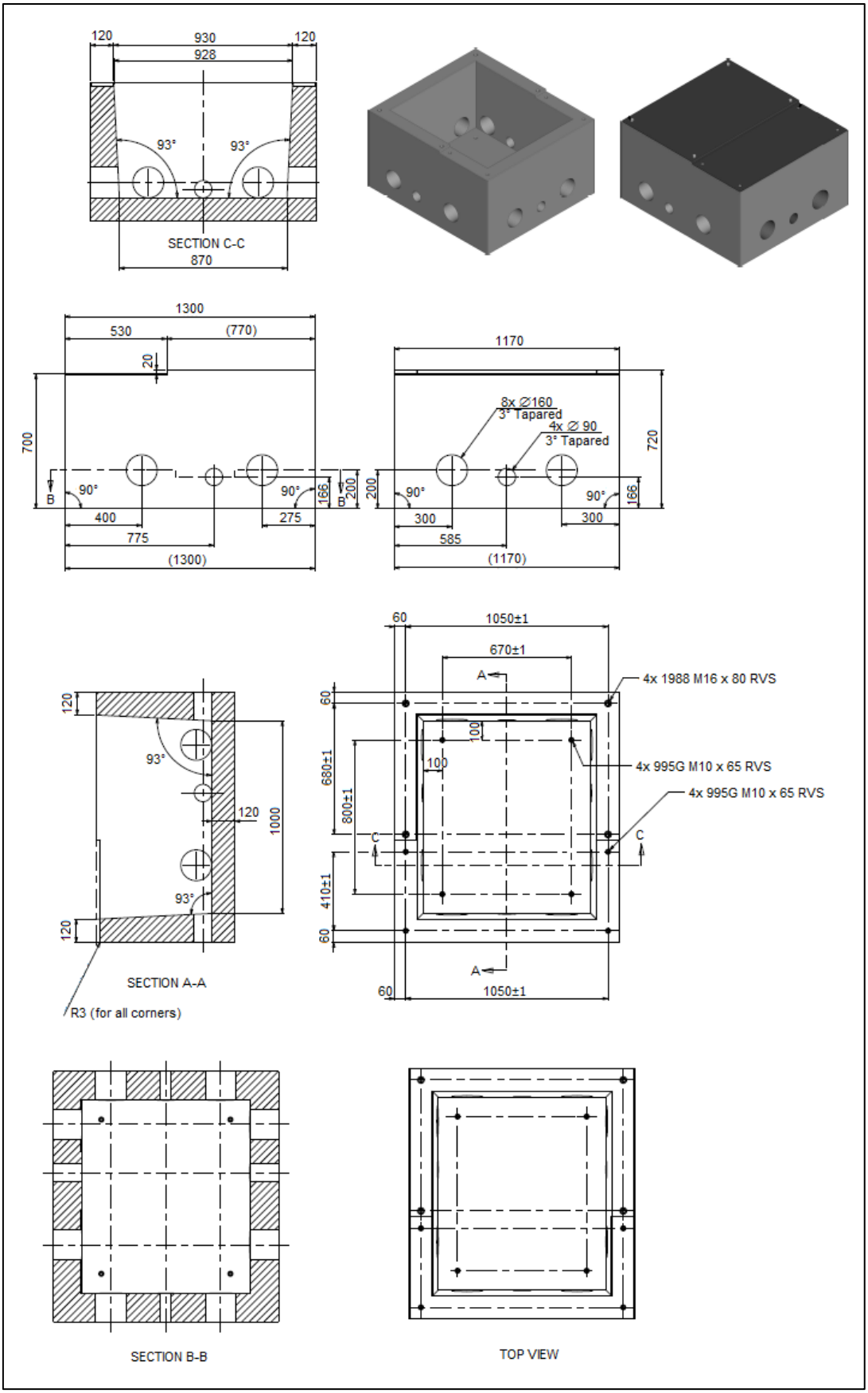

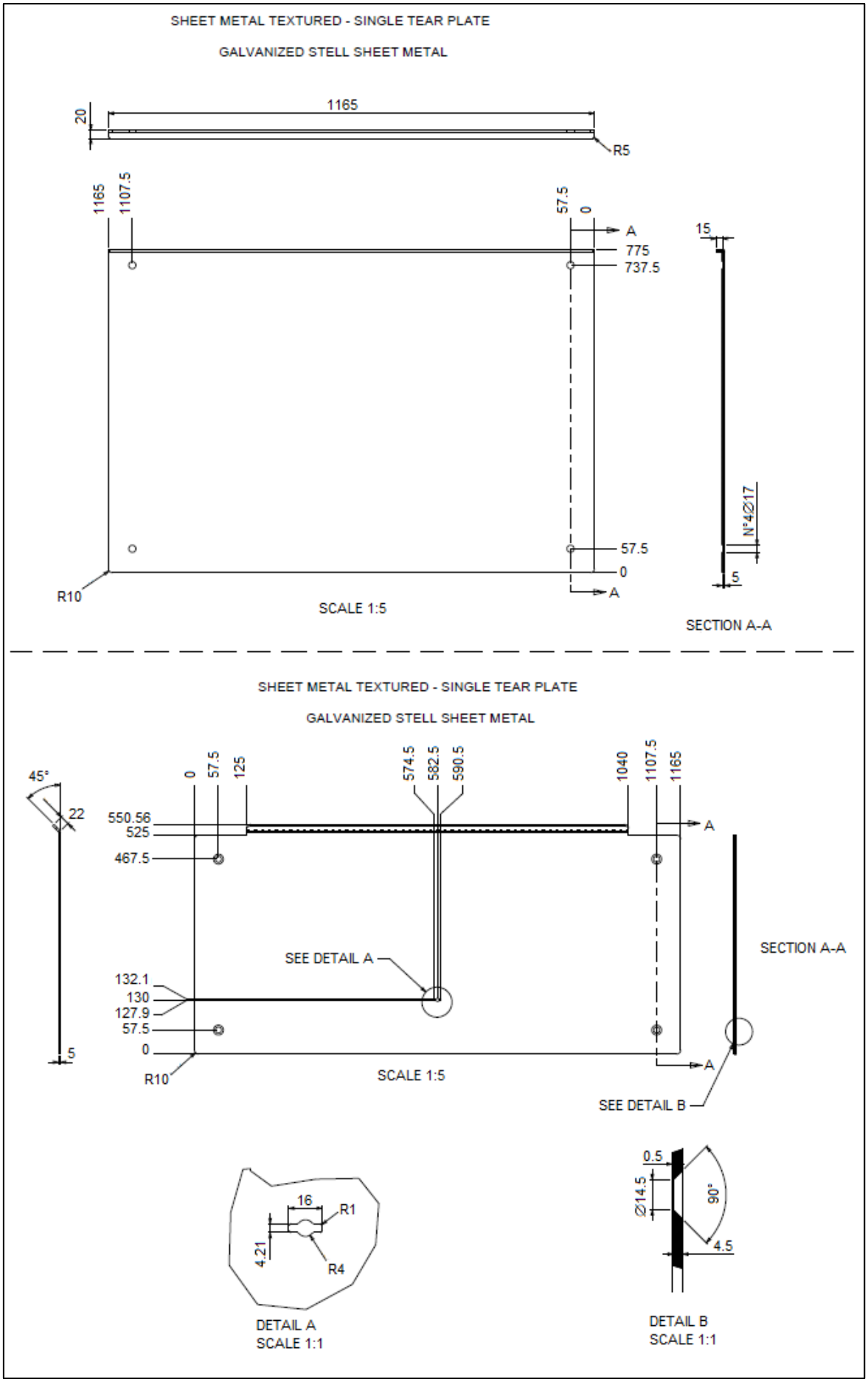
SHEET METAL TEXTURED - SINGLE TEAR PLATE
GALVANIZED STELL SHEET METAL
1165
20
R5
1165
1107.5
57.5
0
A
775
737.5
15
57.5
0
A
R10
SCALE 1:5
N°4Ø17
5
SECTION A-A
SHEET METAL TEXTURED - SINGLE TEAR PLATE
GALVANIZED STELL SHEET METAL
45°
22
5
0
57.5
125
574.5
582.5
590.5
1040
1107.5
1165
550.56
525
467.5
A
SEE DETAIL A
132.1
130
127.9
57.5
0
R10
SCALE 1:5
SECTION A-A
A
SEE DETAIL B
16
R1
4.21
R4
DETAIL A
SCALE 1:1
0.5
Ø14.5
90°
4.5
DETAIL B
SCALE 1:1

G. Dimensions Metal Foundation Power Cabinet

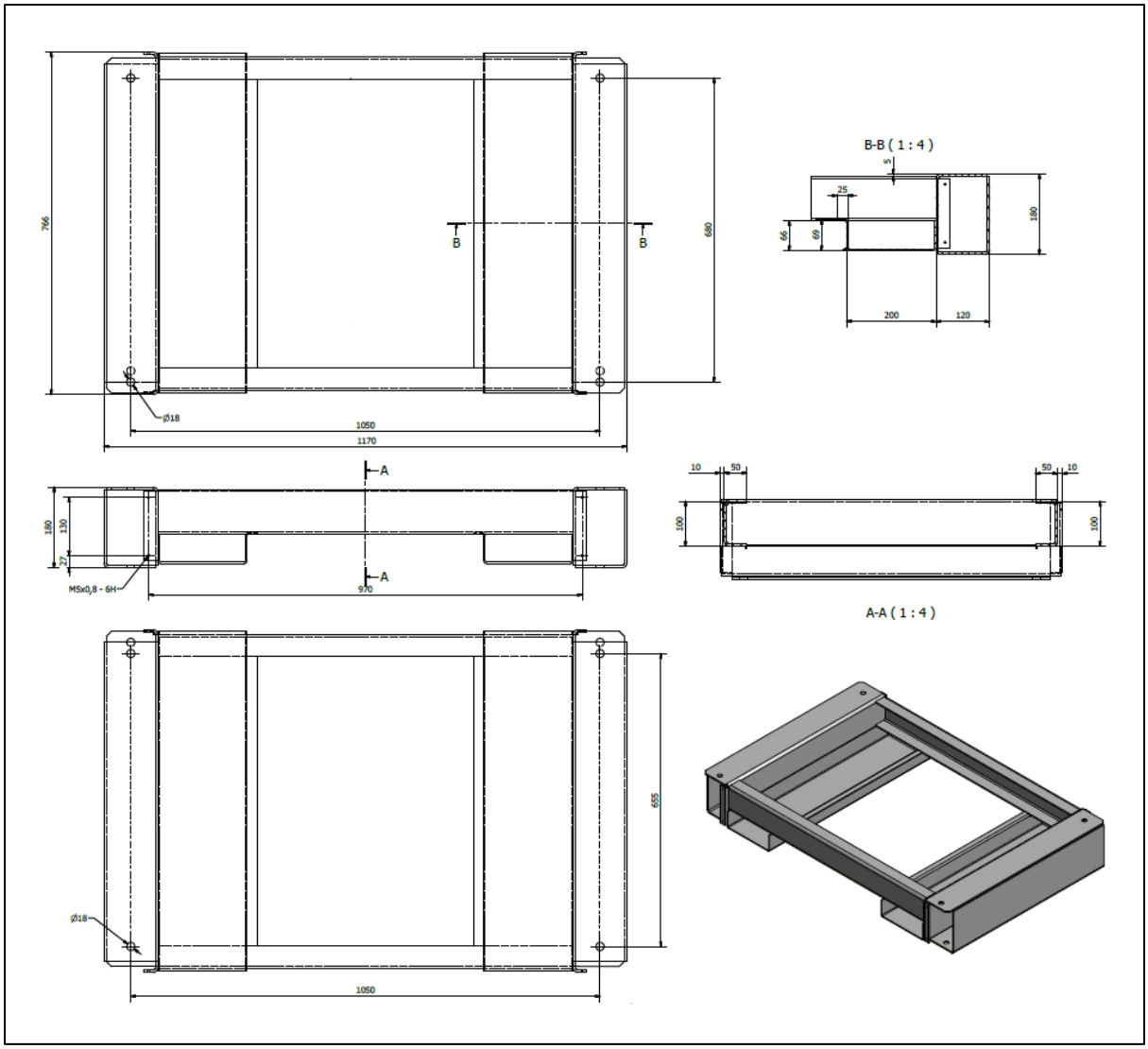

H. Power Cabinet – Outline with Foundation

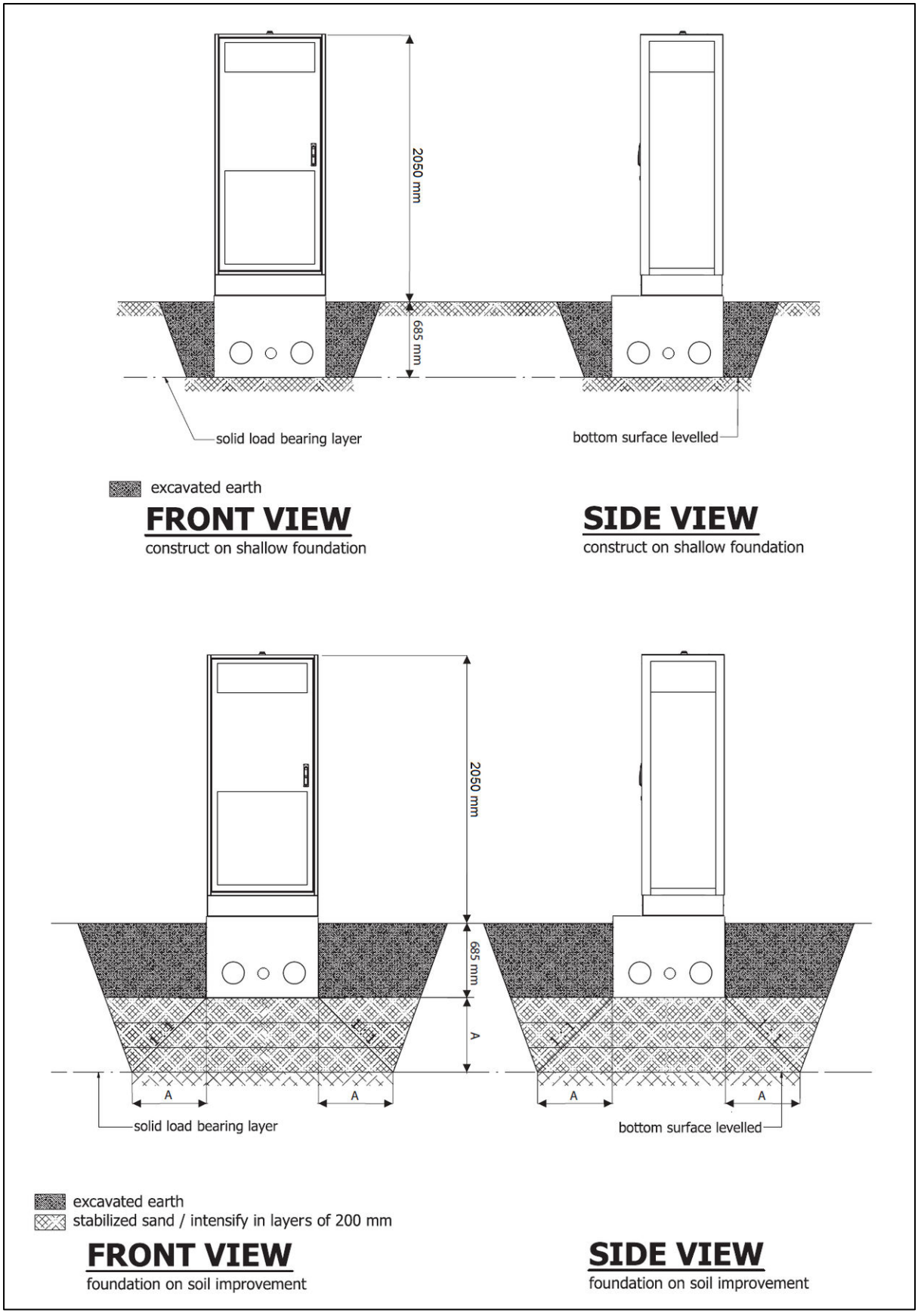

I. Signal connection diagram

For HVC 150 kW system

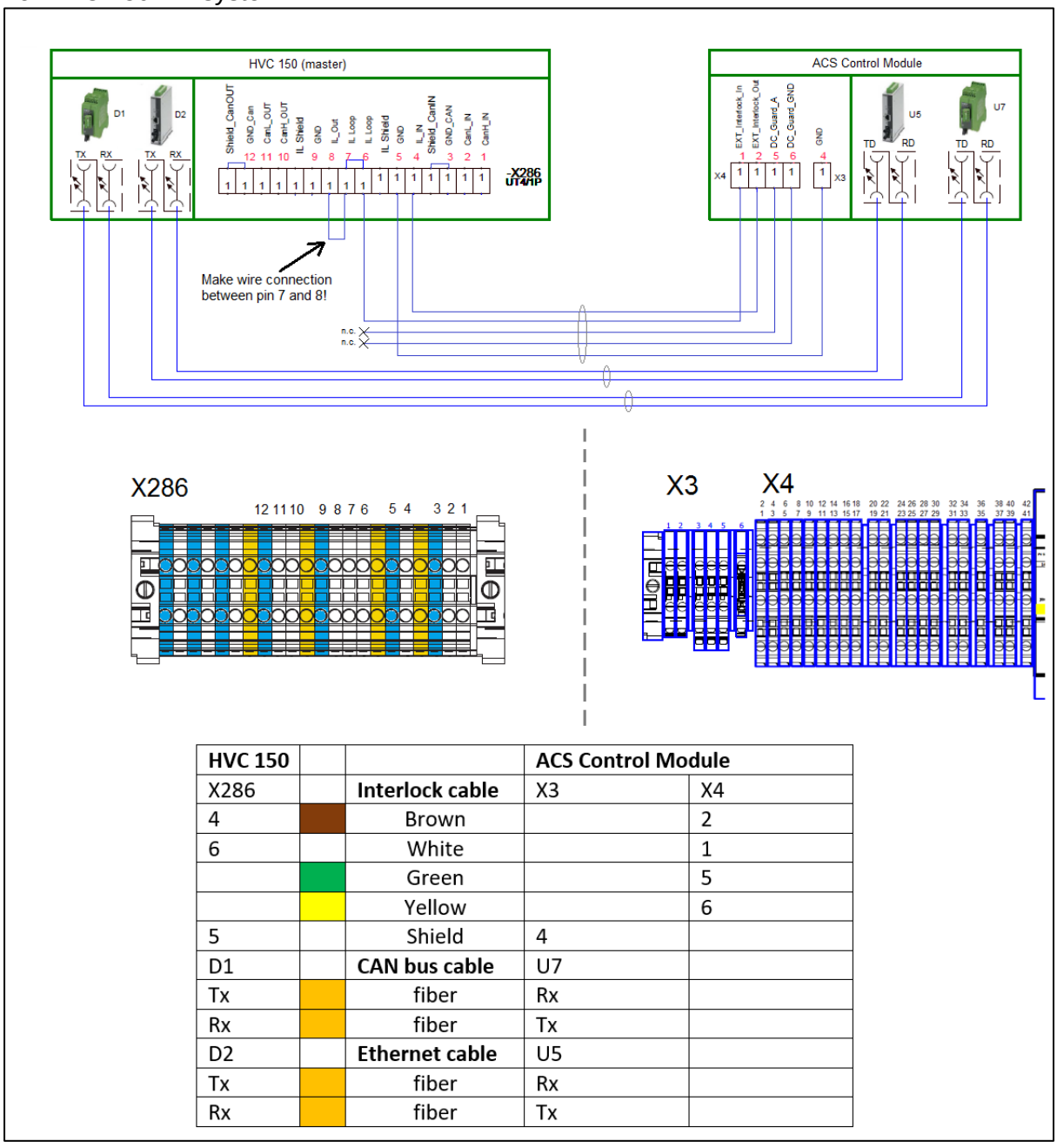

HVC 150			ACS Control Module	
X286		**Interlock cable**	X3	X4
4		Brown		2
6		White		1
		Green		5
		Yellow		6
5		Shield	4	
D1		**CAN bus cable**	U7	
Tx		fiber	Rx	
Rx		fiber	Tx	
D2		**Ethernet cable**	U5	
Tx		fiber	Rx	
Rx		fiber	Tx	

For HVC 300 kW system

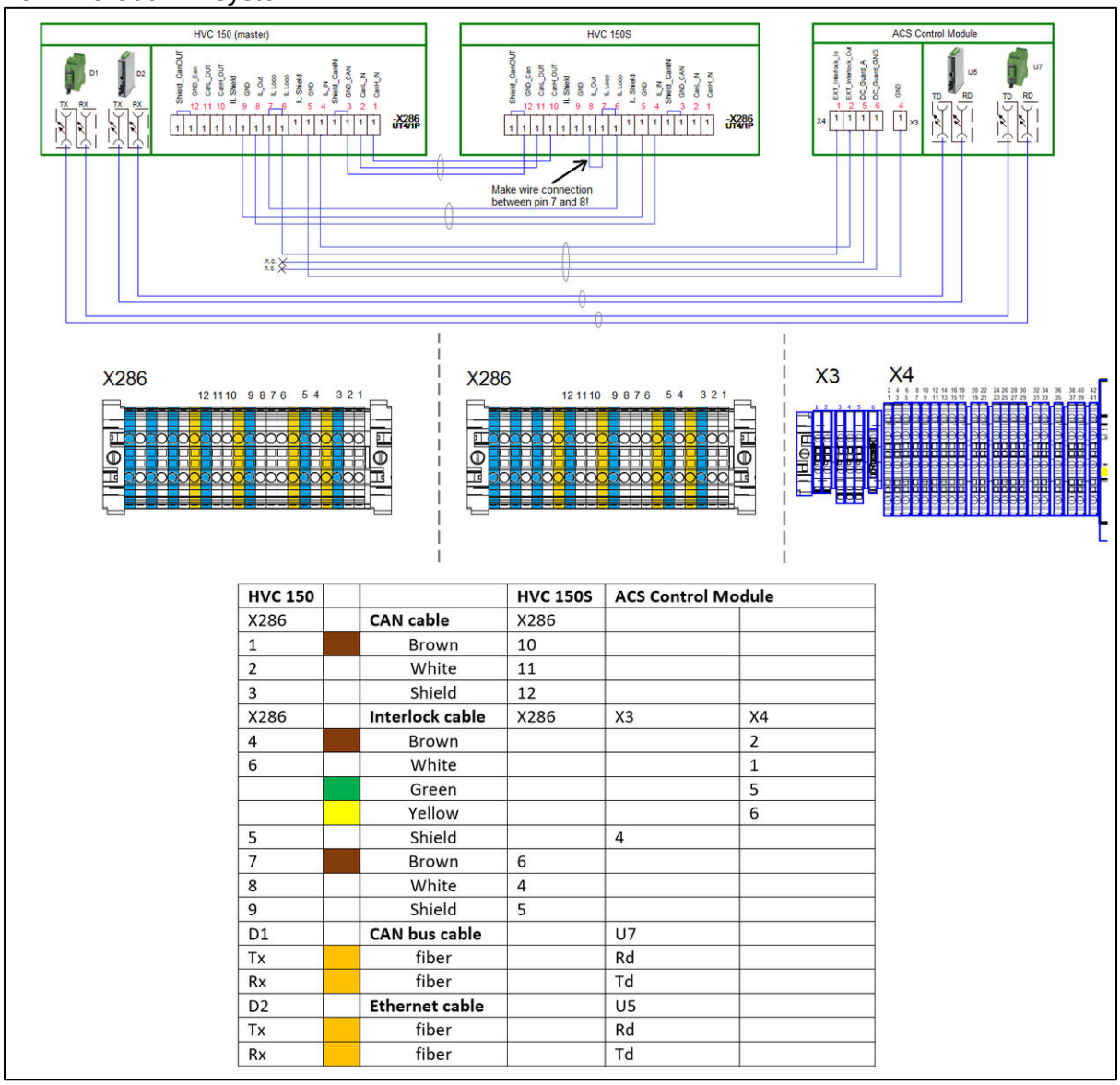

HVC 150			HVC 150S	ACS Control Module	
X286		**CAN cable**	X286		
1		Brown	10		
2		White	11		
3		Shield	12		
X286		**Interlock cable**	X286	X3	X4
4		Brown			2
6		White			1
		Green			5
		Yellow			6
5		Shield		4	
7		Brown	6		
8		White	4		
9		Shield	5		
D1		**CAN bus cable**		U7	
Tx		fiber		Rd	
Rx		fiber		Td	
D2		**Ethernet cable**		U5	
Tx		fiber		Rd	
Rx		fiber		Td	

For HVC 450 kW system

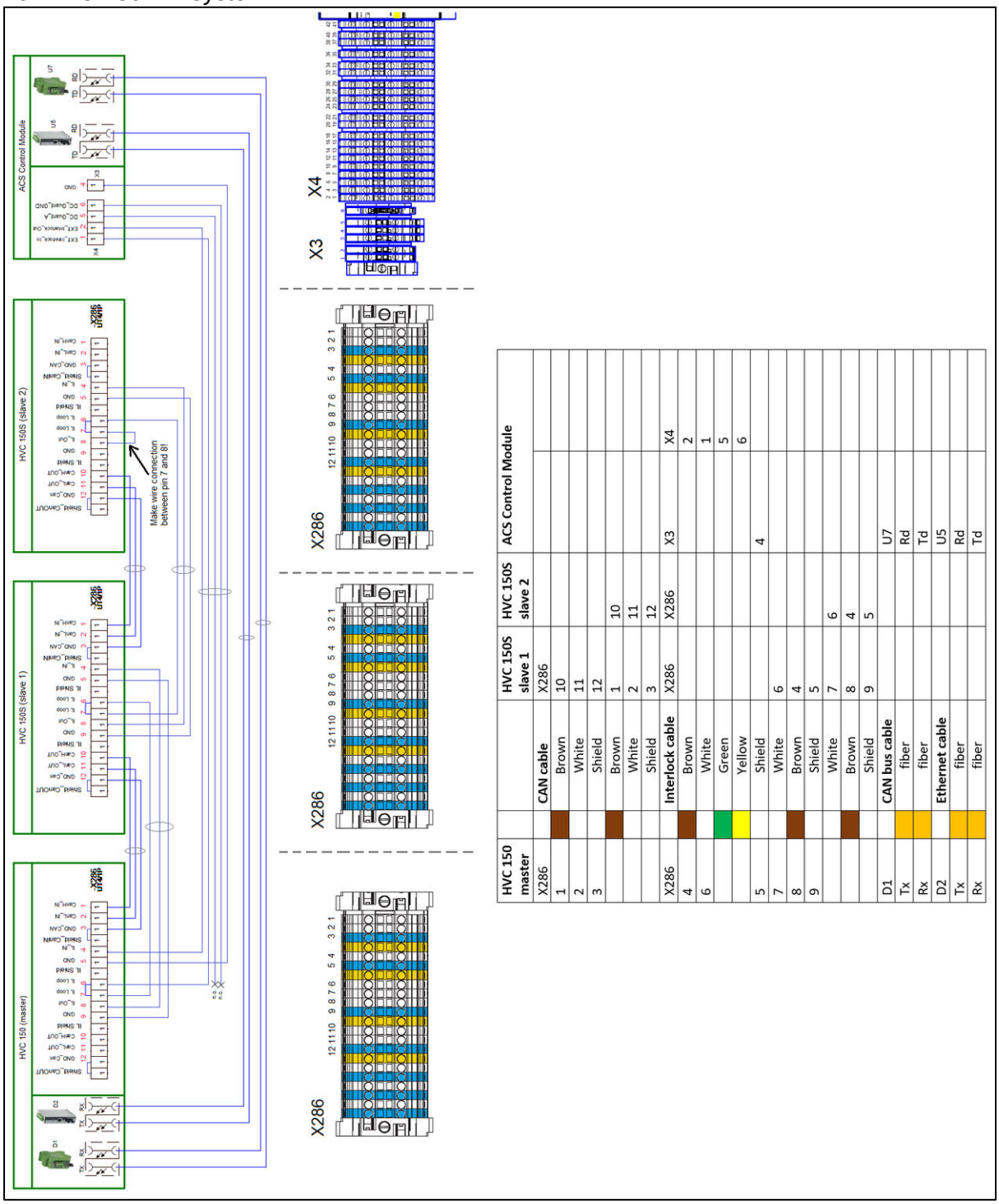

HVC 150 master		HVC 150S slave 1	HVC 150S slave 2	ACS Control Module		
X286	**CAN cable**	X286				
1	Brown	10				
2	White	11				
3	Shield	12				
	Brown	1	10			
	White	2	11			
	Shield	3	12			
X286	**Interlock cable**	X286	X286	X3	X4	
4	Brown				2	
6	White				1	
	Green				5	
	Yellow				6	
5	Shield			4		
7	White	6				
8	Brown	4				
9	Shield	5				
	White	7	6			
	Brown	8	4			
	Shield	9	5			
D1	**CAN bus cable**			U7		
Tx	fiber			Rd		
Rx	fiber			Td		
D2	**Ethernet cable**			U5		
Tx	fiber			Rd		
Rx	fiber			Td		

J. Ground overview of the system

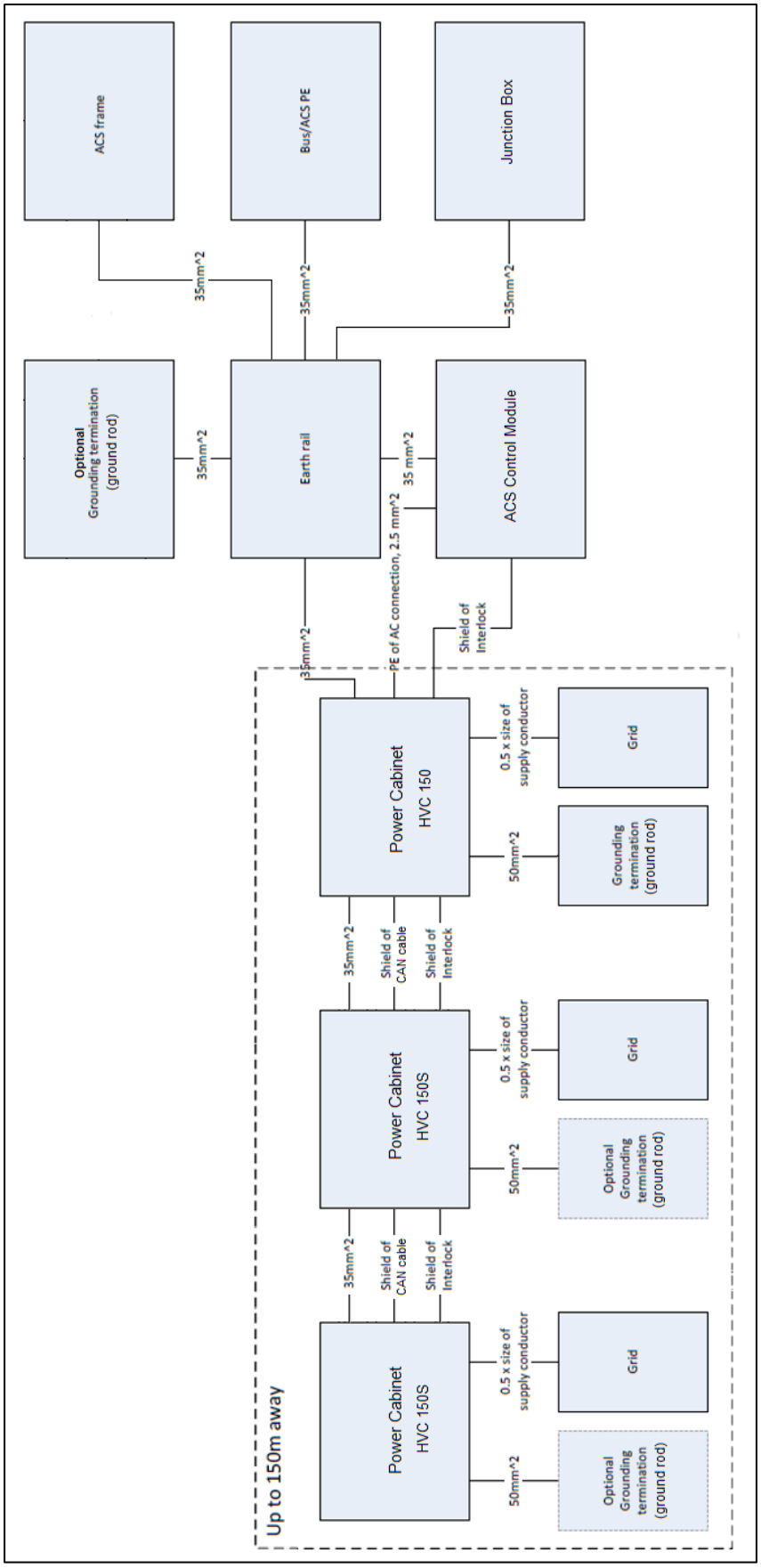

K. WEEE disposal – 2012-19/EU

ABB

ENGLISH

Electrical and electronic equipment to be separately collected in compliance with the Directive on waste electrical and electronic equipment (WEEE - 2012/19/EU)

The symbol (crossed out wheeled-bin) on your product indicates that the product shall not be mixed or disposed with your household waste, at their end of use.

This product shall be handed over to your local community waste collection point for the recycling of the product.

For more information, please contact your Government Waste-Disposal department in your country.

Inappropriate waste handling could possibly have a negative effect on the environment and human health due to potential hazardous substances. With your cooperation in the correct disposal of this product, you contribute to reuse, recycle and recover the product and our environment will be protected.

FRANÇAIS

Équipements électriques et électroniques collectés séparément conformément à la Directive relative aux déchets d'équipements électriques et électroniques (WEEE - 2012/19/EU)

Ce symbole (poubelle interdite) apposé sur le produit indique qu'en fin de vie ce produit ne doit pas être traité avec les déchets ménagers.

Il doit être remis à un point de collecte approprié pour le recyclage des appareils électriques et électroniques.

Pour de plus amples informations, veuillez contacter le service de collecte des déchets ménagers local.

Ce produit contient des substances potentiellement dangereuses qui peuvent avoir des effets néfastes sur l'environnement et la santé humaine. En veillant à la mise au rebut correcte de ce produit, vous contribuerez à assurer le traitement, la récupération et le recyclage de ce produit et à protéger l'environnement.

ESPAÑOL

Aparatos eléctricos y electrónicos recopilados de modo separado en conformidad con la Directiva sobre residuos de aparatos eléctricos y electrónicos (WEEE - 2012/19/EU)

Los productos identificados con este símbolo (papelera tachada) no deben eliminarse como residuos domésticos una vez finalizada su vida útil.

Este producto debe entregarse a un punto de recogida de la comunidad local para su recuperación y reciclado.

Para mayor información, sírvase ponerse en contacto con el Departamento de Disposición de Desechos de su Ayuntamiento.

El manejo inadecuado de los residuos supone riesgos para la salud humana o el medio ambiente. Con la reutilización, el reciclado de los materiales u otras formas de valorización de tales productos usted contribuye de manera importante a la protección de nuestro medio ambiente.

NEDERLASNDS

Elektrische en elektronische apparatuur worden afzonderlijk ingezameld in naleving van de vereisten van de Richtlijn betreffende afgedankte elektrische en elektronische apparatuur (WEEE - 2012/19/EU)

Het symbool (doorgekruiste afvalbak op wielen) op het product geeft aan dat het product aan het einde van haar levensduur niet samen met of in de vorm van huishoudafval mag worden weggegooid.

Het product moet naar een verzamelplaats (milieudepot) worden gebracht waar dergelijke producten worden gerecycled.

Neem voor meer informatie contact op met de relevante overheidsafdeling voor afval/vuilnis die in uw land bestaat.

Het kan nadelige gevolgen hebben op voor mens en milieu als afval op een verkeerde manier wordt behandeld waardoor potentieel schadelijke stoffen vrij komen. Door uw medewerking te verlenen en dit product op de juiste wijze wegwerpt, kunt u een bijdrage leveren aan het herstellen, hergebruiken en recyclen van dit product om zo ons milieu te beschermen.

DANSK

Elektrisk og elektronisk udstyr indsamles særskilt i overensstemmelse med direktiv om affald af elektrisk og elektronisk udstyr (WEEE - 2012/19/EU)

Symbolet (en overstreget affaldsspand med hjul) på produktet angiver, at produktet ikke må bandes med eller bortskaffes sammen med almindeligt husholdningsaffald, når det er udtjent.

Produktet skal afleveres til det lokale affaldsindleveringssted til genbrug.

Kontakt venligst afdelingen for bortskaffelse af affald i din kommune angående yderligere information.

Uhensigtsmæssig bortskaffelse af affald kan have en negativ virkning på miljøet og folks helbred, da det kan indeholde potentielle, farlige substanser. Med din medvirken i henseende til forskriftsmæssig bortskaffelse af dette produkt, kan du bidrage til genbrug, recirkulere og genindvinde produkterne og samtidigt medvirke til, at vores miljø vil blive beskyttet.

DEUTSCH

Elektro- und Elektronikgeräte sind getrennt zu sammeln in Einklang mit der Richtlinie über Elektro- und Elektronik-Altgeräte (WEEE - 2012/19/EU)

Dieses Symbol (ausgekreuzte Mülltonne) auf dem Produkt bezeichnet, dass Altgeräte usw.

nicht wie normaler Haushaltsabfall in den Müll gegeben werden dürfen, sondern zum Recycling an einer hierfür vorgesehenen Annahmestelle abzugeben ist.

Für nähere Informationen wenden Sie sich bitte an die für Müllentsorgung zuständigen örtlichen Behörden.

Bei unsachgemäßer Entsorgung besteht das Risiko nachteiliger Auswirkungen auf Umwelt und Gesundheit durch potentiell gefährliche Substanzen. Durch Ihre Kooperation zur ordnungsgemäßen Entsorgung fördern Sie die Wiederverwendung, das Recycling und die Rückgewinnung von Stoffen und tragen zum Umweltschutz bei.

ITALIANO

Apparecchiatura Elettrica ed Elettronica oggetto di raccolta differenziata in conformità alla Direttiva sui Rifiuti di apparecchiature Elettriche ed Elettroniche (WEEE - 2012/19/EU)

Il simbolo (un bidone sbarrato da una croce) indica che il prodotto non deve essere smaltito con i rifiuti domestici, alla fine della sua vita.

Questo prodotto deve essere consegnato al punto di raccolta rifiuti della propria comunità locale per il suo riciclaggio.

Per ulteriori informazioni, rivolgersi all'organo statale preposto allo smaltimento dei rifiuti nel proprio paese.

Uno smaltimento dei rifiuti inappropriato può avere effetti negativi sull'ambiente e sulla salute umana a causa di sostanze potenzialmente pericolose. Collaborando allo smaltimento corretto di questo prodotto, si contribuisce al riutilizzo, al riciclaggio e al recupero del prodotto, e alla protezione del nostro ambiente.

PORTUGUÊS

Equipamentos Eléctricos e Electrónicos recolhidos seletivamente de acordo com a Diretiva relativa aos resíduos de equipamentos elétricos e eletrónicos (WEEE - 2012/19/EU)

O símbolo (caixote de lixo de rodas com uma linha cruzada) em seu produto indica que o produto, no fim da sua vida útil, não deve ser misturado ou eliminado com o lixo doméstico comum.

Este produto deverá ser entregue a uma estação de recolha de lixo da comunidade local para a reciclagem do produto.

Para mais informações, entre em contacto com o Departamento de Tratamento de Lixo do Governo do seu país.

O tratamento de lixo incorrecto poderia provocar um efeito negativo no meio ambiente e saúde humana devido a substâncias potencialmente perigosas. Com a sua cooperação para a eliminação correcta deste produto, contribuirá para a reutilização, reciclagem e recuperação do produto, e nosso meio ambiente será protegido.

SVENSKA

Elektriska och elektroniska produkter ska samlas in separat i enlighet med direktivet om avfall som utgörs av eller innehåller elektrisk eller elektronisk utrustning (WEEE - 2012/19/EU)

Denna symbol (en överkorsad soptunna) på produkten innebär att produkten ej ska blandas eller slängas med ditt hushållsavfall när den är förbrukad.

Produkten ska lämnas till en lokal insamlingsplats för denna slags produkter för återvinning.Kontakta kommunkontoret för närmare detaljer om var du finner sådana insamlingsplatser.

Olämplig avfallshantering kan få negativa effekter på miljön och på mänsklig hälsa då en produkt kan innehålla farliga ämnen.

Vi ber om ditt samarbeta i bortskaffningen av denna produkt för att bidra till återvinning, återanvändning och en hälsosammare miljö.

SUOMI

Sähkö- ja elektroniikkalaitteet on kierrätettävä erikseen sähkö- ja elektroniikkalaiteromusta annetun direktiivin (WEEE - 2012/19/EU) mukaisesti

Tuotteeseen merkitty symboli (yritse ruksattu jäteasiitiö) osoittaa, että tuotetta ei saa sekoittaa eikä hävittää talousjätteiden kanssa.

Tuote on luovutettava sopivaan tälaisten laitteiden kierrätyksestä huolehtivaan keräyspisteeseen.

Pyydä lisätietoja jäteasioista vastaavilta paikallisilta viranomaisilta.

Tämän tuotteen asianmukaisen hävittämisen varmistamisella autetaan estämään sen mahdolliset ympäristöön ja terveyteen kohdistuvat haittavaikutukset, jotka voi aiheutua muussa tapauksessa tämän tuotteen epäasianmukaisesta käsittelystä. Hävittämällä tuotteen asianmukaisesti autat varmistamaan, että tuote uudelleenkäytetään, kierrätetään ja kerätään ja ympäristöä suojellaan.

BCA.00165.0

NOTES

