efector100

II5785 **Inductive sensors**

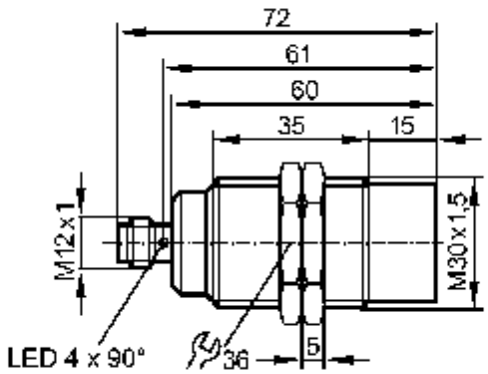

Made in Germany

Product characteristics		
Inductive sensor		
Metal thread M30 x 1.5		
Connector		
Increased sensing range		
Sensing range 22 mm [nf]		
non-flush mountable		
Electrical data		
Electrical design		DC PNP
Operating voltage	[V]	10...36 DC
Current consumption	[mA]	< 15 (24 V)
Protection class		II
Reverse polarity protection		yes
Outputs		
Output function		normally open
Voltage drop	[V]	< 2.5
Current rating	[mA]	200
Short-circuit protection		pulsed
Overload protection		yes
Switching frequency	[Hz]	50
Range		
Sensing range	[mm]	22
Operating distance	[mm]	0...17.6

Accuracy / deviations		
Correction factors		mild steel = 1 / stainless steel approx. 0.7 / brass approx. 0.4 / Al approx. 0.3 / Cu approx. 0.2
Hysteresis	[% of Sr]	1...15
Environment		
Ambient temperature	[°C]	-25...70
Protection		IP 67
Tests / approvals		
EMC		EN 60947-5-2 EN 55011: class B
MTTF	[Years]	1762
Mechanical data		
Mounting		non-flush mountable
Housing materials		brass white bronze coated; active face: PBT
Weight	[kg]	0.181
Displays / operating elements		
Output status indication	LED	yellow
Electrical connection		
Connection		M12 connector

Wiring



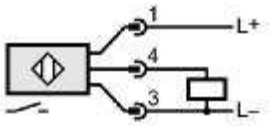

Accessories		
Accessories (included)		2 lock nuts