

# Variable frequency drive, 3-phase 480 V, 9A, EMC filter, Internal braking transistor, protection type IP54

Powering Business Worldwide

| | |
|---|---|
| **Part no.** | **DG1-349D0FB-C54C** |
| **Catalog No.** | **9702-1111-00P** |
| **Eaton Catalog No.** | **DG1-349D0FB-C54C** |
| **EL-Nummer (Norway)** | **4138094** |

## Delivery program

| | | | |
|---|---|---|---|
| Product range | | | Variable frequency drives |
| Part group reference (e.g. DIL) | | | DG1 |
| Rated operational voltage | $U_e$ | | 400 V AC, 3-phase<br>480 V AC, 3-phase<br>500 V AC, 3-phase |
| Output voltage with $V_e$ | $U_2$ | | 400 V AC, 3-phase<br>480 V AC, 3-phase<br>500 V AC, 3-phase |
| Mains voltage (50/60Hz) | $U_{LN}$ | V | 380 (-15%) - 500 (+10%) |
| **Rated operational current** | | | |
| At 150% overload | $I_e$ | A | 9 |
| Note | | | Rated operational current for a switching frequency of 1 - 12 kHz and an ambient temperature of +50 °C for a 150% overload and +40 °C for a 110% overload |
| At 110% overload | $I_e$ | A | 12 |
| Note | | | Overload cycle for 60 s every 600 s |
| **Assigned motor rating** | | | |
| Note | | | for normal internally and externally ventilated 4 pole, three-phase asynchronous motors with 1500 $rpm^{-1}$ at 50 Hz or 1800 $min^{-1}$ at 60 Hz |
| Note | | | Overload cycle for 60 s every 600 s |
| Note | | | at 400 V, 50 Hz |
| 150 % Overload | P | kW | 4 |
| 110 % Overload | P | kW | 5.5 |
| 150 % Overload | $I_M$ | A | 8.5 |
| 110 % Overload | $I_M$ | A | 11.5 |
| Note | | | at 500 V, 50 Hz |
| 150 % Overload | P | kW | 4 |
| 110 % Overload | P | kW | 5.5 |
| 150 % Overload | $I_M$ | A | 6.8 |
| 110 % Overload | $I_M$ | A | 9 |
| Note | | | at 480 V, 60 Hz |
| 150 % Overload | P | HP | 5 |
| 110 % Overload | P | HP | 7.5 |
| 150 % Overload | $I_M$ | A | 7.6 |
| 110 % Overload | $I_M$ | A | 11 |
| Degree of Protection | | | IP54/NEMA12 |
| Interface/field bus (built-in) | | | Modbus RTU, Modbus TCP, BACnet MS/TP, Ethernet IP |
| Fieldbus connection (optional) | | | Profibus, CAN, DeviceNet, i.V. ProfiNet, SmartWire-DT |
| Fitted with | | | Radio interference suppression filter<br>Additional PCB protection<br>Multi-line graphic display<br>Brake chopper<br>DC link choke |
| Frame size | | | FS1 |
| Connection to SmartWire-DT | | | with SmartWire-DT module DXG-NET-SWD |

## Technical data

### General

| | | | |
|---|---|---|---|
| Standards | | | Specification for general requirements: IEC/EN 61800-2 |

| | | | |
|---|---|---|---|
| | | | EMC requirements: IEC/EN 61800-3<br>Safety requirements: IEC/EN 61800-5 |
| Certifications | | | CE, UL, cUL, RCM, UkrSEPRO, EAC |
| Production quality | | | RoHS, ISO 9001 |
| Climatic proofing | $\rho_w$ | % | < 95%, average relative humidity (RH), non-condensing, non-corrosive |
| Air quality | | | 3C2, 3S2 |
| Ambient temperature | | | |
| operation (150 % overload) | ϑ | °C | -30 - +50 (max. +60 with 1 % derating per Kelvin temperature rise) |
| operation (110 % overload) | ϑ | °C | -30 - +40 (max. +55 mit 1 % Derating pro Kelvin Temperaturerhöhung) |
| Storage | ϑ | °C | -40 - +70 |
| Overvoltage category | | | III |
| Pollution degree | | | 2 |
| Radio interference level | | | |
| Radio interference class (EMC) | | | C1 (with external filter, for conducted emissions only), C2, C3, depending on the motor cable length, the connected load, and ambient conditions. External radio interference suppression filters (optional) may be necessary. |
| Environment (EMC) | | | 1st and 2nd environments as per EN 61800-3 |
| maximum motor cable length | l | m | C2 ≤ 10 m<br>C3 ≤ 50 m |
| Mechanical shock resistance | | g | EN 61800-5-1, EN 60068-2-27<br>UPS drop test (for weights inside the UPS frame)<br>Storage and transportation: maximum 15 g, 11 ms (inside the packaging) |
| Vibration | | | EN 61800-5-1, EN 60068-2-6: 5 - 150 Hz<br>Amplitude: 1 mm (peak) at 5 - 15.8 Hz<br>Maximum acceleration amplitude: 1 g at 15.8 – 150 Hz |
| Mounting position | | | Vertical |
| Altitude | | m | 0 - 1000 m above sea level<br>Above 1000 m: 1% derating for every 100 m<br>max. 3000 m (2000 m for Corner Grounded TN Systems) |
| Degree of Protection | | | IP54/NEMA12 |
| Protection against direct contact | | | BGV A3 (VBG4, finger- and back-of-hand proof) |

## Main circuit

| | | | |
|---|---|---|---|
| Supply | | | |
| Rated operational voltage | $U_e$ | | 400 V AC, 3-phase<br>480 V AC, 3-phase<br>500 V AC, 3-phase |
| Mains voltage (50/60Hz) | $U_{LN}$ | V | 380 (-15%) - 500 (+10%) |
| Input current (150% overload) | $I_{LN}$ | A | 8.4 |
| Input current (110% overload) | $I_{LN}$ | T | 11.2 |
| System configuration | | | TN-S, TN-C, TN-C-S, TT, IT |
| Supply frequency | $f_{LN}$ | Hz | 50/60 |
| Frequency range | $f_{LN}$ | Hz | 45 - 66 |
| Mains switch-on frequency | | | Maximum of one time every 60 seconds |
| Mains current distortion | THD | % | 35.3 |
| Rated conditional short-circuit current | $I_q$ | kA | < 100 |
| Power section | | | |
| Function | | | Variable frequency drive with internal DC link, DC link choke and IGBT inverter |
| Overload current (150% overload) | $I_L$ | A | 13.5 |
| Overload current (110% overload) | $I_L$ | A | 13.2 |
| max. starting current (High Overload) | $I_H$ | % | 200 |
| Note about max. starting current | | | for 2 seconds every 20 seconds |
| Output voltage with $V_e$ | $U_2$ | | 400 V AC, 3-phase<br>480 V AC, 3-phase<br>500 V AC, 3-phase |
| Output Frequency | $f_2$ | Hz | 0 - 50/60 (max. 400) |
| Switching frequency | $f_{PWM}$ | kHz | 4<br>adjustable 1 - 12 |
| Operation Mode | | | U/f control<br>Speed control with slip compensation<br>sensorless vector control (SLV)<br>Torque regulation |
| Frequency resolution (setpoint value) | Δf | Hz | 0.01 |

| | | | |
|---|---|---|---|
| Rated operational current | | | |
| At 150% overload | $I_e$ | A | 9 |
| At 110% overload | $I_e$ | A | 12 |
| Note | | | Rated operational current for a switching frequency of 1 - 12 kHz and an ambient temperature of +50 °C for a 150% overload and +40 °C for a 110% overload |
| Motor current limit | I | A | 0.1 - 2 x $I_H$ (CT) |
| Power loss | | | |
| Heat dissipation at rated operational current $I_e$ =150 % | $P_V$ | W | 129 |
| Efficiency | η | % | 98.1 |
| Maximum leakage current to ground (PE) without motor | $I_{PE}$ | mA | 2.9 |
| Fan | | | temperature controlled<br>Tool-less swapping |
| Fitted with | | | Radio interference suppression filter<br>Additional PCB protection<br>Multi-line graphic display<br>Brake chopper<br>DC link choke |
| Safety function | | | STO (Safe Torque Off, SIL1, PLc Cat 1) |
| Frame size | | | FS1 |
| Motor feeder | | | |
| Note | | | for normal internally and externally ventilated 4 pole, three-phase asynchronous motors with 1500 $rpm^{-1}$ at 50 Hz or 1800 $min^{-1}$ at 60 Hz |
| Note | | | Overload cycle for 60 s every 600 s |
| Note | | | at 400 V, 50 Hz |
| 150 % Overload | P | kW | 4 |
| Note | | | at 500 V, 50 Hz |
| 150 % Overload | P | kW | 4 |
| 110 % Overload | P | kW | 5.5 |
| Note | | | at 480 V, 60 Hz |
| 150 % Overload | P | HP | 5 |
| 110 % Overload | P | HP | 7.5 |
| maximum permissible cable length | I | m | screened: 100 |
| Braking function | | | |
| Standard braking torque | | | max. 30 % $M_N$ |
| DC braking torque | | | adjustable to 150 % |
| Braking torque with external braking resistance | | | Max. 100% of rated operational current $I_e$ with external braking resistor |
| minimum external braking resistance | $R_{min}$ | Ω | 63 |
| Switch-on threshold for the braking transistor | $U_{DC}$ | V | 850 V DC |
| DC braking | % | $I/I_e$ | ≦ 150, adjustable |

## Control section

| | | | |
|---|---|---|---|
| External control voltage | $U_c$ | V | 24 V DC (max. 250 mA options incl.) |
| Reference voltage | $U_s$ | V | 10 V DC (max. 10 mA) |
| Analog inputs | | | 2, parameterizable, 0 - 10 V DC, 2 - 10 V DC, -10 - +10 V DC, 0/4 - 20 mA |
| Analog outputs | | | 2, parameterizable, 0 - 10 V, 0/4 - 20 mA |
| Digital inputs | | | 8, parameterizable, max. 30 V DC |
| Digital outputs | | | 1, parameterizable, 24 V DC |
| Relay outputs | | | 3, parameterizable, 2 changeover contacts and 1 N/O, 6 A (240 VAC) / 6 A (24 VDC) |
| Interface/field bus (built-in) | | | Modbus RTU, Modbus TCP, BACnet MS/TP, Ethernet IP |
| Expansion slots | | | 2 |

## Assigned switching and protective elements

| | | | |
|---|---|---|---|
| Power Wiring | | | |
| IEC (Type B, gG), 150 % | | | PKZM0-10 |
| Safety device (110% overload) | | | PKM0-12 |
| UL (Class CC or J) | | A | 15 |
| 150 % overload (CT/$I_H$, at 50 °C) | | | Integrated DC link choke, uk = 5% |
| 110 % overload (VT/$I_L$, at 40 °C) | | | Integrated DC link choke, uk = 5% |
| Motor feeder | | | |

| | | | |
|---|---|---|---|
| 150 % overload (CT/$I_H$, at 50 °C) | | | DX-LM3-011 |
| 110 % overload (VT/$I_L$, at 40 °C) | | | DX-LM3-016 |
| 150 % overload (CT/$I_H$, at 50 °C) | | | DX-SIN3-010 |
| 110 % overload (VT/$I_L$, at 40 °C) | | | DX-SIN3-016 |
| 10 % duty factor (DF) | | | DX-BR075-1K4 |
| 20 % duty factor (DF) | | | DX-BR075-5K1 |
| 40 % duty factor (DF) | | | DX-BR075-5K1 |

## Design verification as per IEC/EN 61439

| | | | |
|---|---|---|---|
| Technical data for design verification | | | |
| Rated operational current for specified heat dissipation | $I_n$ | A | 9 |
| Equipment heat dissipation, current-dependent | $P_{vid}$ | W | 129 |
| Operating ambient temperature max. | | °C | -30 |
| Operating ambient temperature max. | | °C | 60 |
| IEC/EN 61439 design verification | | | |
| 10.2 Strength of materials and parts | | | |
| 10.2.2 Corrosion resistance | | | Meets the product standard's requirements. |
| 10.2.3.1 Verification of thermal stability of enclosures | | | Meets the product standard's requirements. |
| 10.2.3.2 Verification of resistance of insulating materials to normal heat | | | Meets the product standard's requirements. |
| 10.2.3.3 Verification of resistance of insulating materials to abnormal heat and fire due to internal electric effects | | | Meets the product standard's requirements. |
| 10.2.4 Resistance to ultra-violet (UV) radiation | | | Meets the product standard's requirements. |
| 10.2.5 Lifting | | | Does not apply, since the entire switchgear needs to be evaluated. |
| 10.2.6 Mechanical impact | | | Does not apply, since the entire switchgear needs to be evaluated. |
| 10.2.7 Inscriptions | | | Meets the product standard's requirements. |
| 10.3 Degree of protection of ASSEMBLIES | | | Does not apply, since the entire switchgear needs to be evaluated. |
| 10.4 Clearances and creepage distances | | | Meets the product standard's requirements. |
| 10.5 Protection against electric shock | | | Does not apply, since the entire switchgear needs to be evaluated. |
| 10.6 Incorporation of switching devices and components | | | Does not apply, since the entire switchgear needs to be evaluated. |
| 10.7 Internal electrical circuits and connections | | | Is the panel builder's responsibility. |
| 10.8 Connections for external conductors | | | Is the panel builder's responsibility. |
| 10.9 Insulation properties | | | |
| 10.9.2 Power-frequency electric strength | | | Is the panel builder's responsibility. |
| 10.9.3 Impulse withstand voltage | | | Is the panel builder's responsibility. |
| 10.9.4 Testing of enclosures made of insulating material | | | Is the panel builder's responsibility. |
| 10.10 Temperature rise | | | The panel builder is responsible for the temperature rise calculation. Eaton will provide heat dissipation data for the devices. |
| 10.11 Short-circuit rating | | | Is the panel builder's responsibility. The specifications for the switchgear must be observed. |
| 10.12 Electromagnetic compatibility | | | Is the panel builder's responsibility. The specifications for the switchgear must be observed. |
| 10.13 Mechanical function | | | The device meets the requirements, provided the information in the instruction leaflet (IL) is observed. |

## Technical data ETIM 6.0

| | | | |
|---|---|---|---|
| Low-voltage industrial components (EG000017) / Frequency converter =< 1 kV (EC001857) | | | |
| Electric engineering, automation, process control engineering / Electrical drive / Static frequency converter / Static frequency converter = < 1 kv (ecl@ss8.1-27-02-31-01 [AKE177011]) | | | |
| Mains voltage | | V | 380 - 480 |
| Mains frequency | | | 50/60 Hz |
| Number of phases input | | | 3 |
| Number of phases output | | | 3 |
| Max. output frequency | | Hz | 400 |
| Max. output voltage | | V | 480 |
| Rated output current I2N | | A | 12 |
| Max. output at quadratic load at rated output voltage | | kW | 5.5 |
| Max. output at linear load at rated output voltage | | kW | 8 |
| With control unit | | | Yes |

| | | |
|---|---|---|
| Application in industrial area permitted | | Yes |
| Application in domestic- and commercial area permitted | | Yes |
| Supporting protocol for TCP/IP | | Yes |
| Supporting protocol for PROFIBUS | | Yes |
| Supporting protocol for CAN | | Yes |
| Supporting protocol for INTERBUS | | No |
| Supporting protocol for ASI | | No |
| Supporting protocol for KNX | | No |
| Supporting protocol for MODBUS | | Yes |
| Supporting protocol for Data-Highway | | No |
| Supporting protocol for DeviceNet | | Yes |
| Supporting protocol for SUCONET | | No |
| Supporting protocol for LON | | No |
| Supporting protocol for PROFINET IO | | Yes |
| Supporting protocol for PROFINET CBA | | No |
| Supporting protocol for SERCOS | | No |
| Supporting protocol for Foundation Fieldbus | | No |
| Supporting protocol for EtherNet/IP | | No |
| Supporting protocol for AS-Interface Safety at Work | | No |
| Supporting protocol for DeviceNet Safety | | No |
| Supporting protocol for INTERBUS-Safety | | No |
| Supporting protocol for PROFIsafe | | No |
| Supporting protocol for SafetyBUS p | | No |
| Supporting protocol for other bus systems | | Yes |
| Number of HW-interfaces industrial Ethernet | | 1 |
| Number of HW-interfaces PROFINET | | 1 |
| Number of HW-interfaces RS-232 | | 0 |
| Number of HW-interfaces RS-422 | | 0 |
| Number of HW-interfaces RS-485 | | 1 |
| Number of HW-interfaces serial TTY | | 0 |
| Number of HW-interfaces USB | | 0 |
| Number of HW-interfaces parallel | | 0 |
| Number of HW-interfaces other | | 1 |
| With optical interface | | No |
| With PC connection | | Yes |
| Integrated breaking resistance | | Yes |
| 4-quadrant operation possible | | Yes |
| Type of converter | | U converter |
| Degree of protection (IP) | | IP54 |
| Height | mm | 327 |
| Width | mm | 152 |
| Depth | mm | 200 |
| Relative symmetric net frequency tolerance | % | 10 |
| Relative symmetric net current tolerance | % | 10 |

## Approvals

| | |
|---|---|
| Product Standards | UL508C, CSA-C22.2 No. 274-13; IEC/EN61800-3; IEC/EN61800-5; CE marking |
| UL File No. | E134360 |
| UL Category Control No. | NMMS, NMMS7 |
| CSA File No. | UL report applies to both US and Canada |
| North America Certification | UL listed, certified by UL for use in Canada |
| Suitable for | Branch circuits |
| Max. Voltage Rating | 3~500 V AC IEC: TN-S UL/CSA: 'Y' (Solidly Grounded Wye) |
| Degree of Protection | IP54/NEMA12 |

## Dimensions

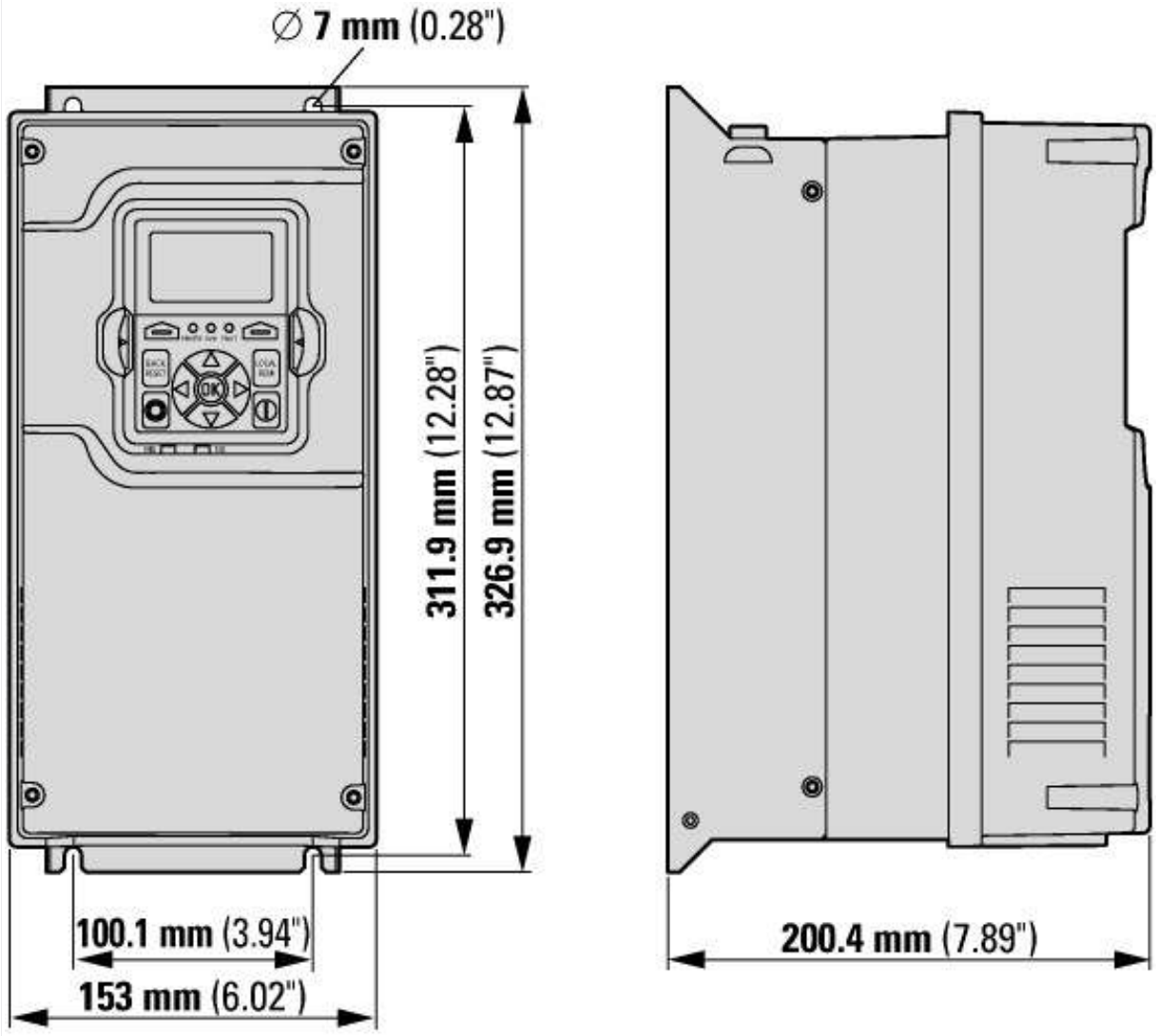


## Additional product information (links)

| | |
|---|---|
| Documentation | http://www.eaton.eu/Europe/Electrical/ProductsServices/AutomationControl/SwitchingProtectingDrivingMotors/PowerXLfrequencydrives/DG1GeneralPurposeDrives/index.htm?wtredirect=www.eaton.eu/dg1#tabs-7 |
| Manuals | http://www.eaton.eu/Europe/Electrical/ProductsServices/AutomationControl/SwitchingProtectingDrivingMotors/PowerXLfrequencydrives/DG1GeneralPurposeDrives/index.htm?wtredirect=www.eaton.eu/dg1#tabs-8 |


© 12/2017 by Eaton Industries GmbH