Current Transducer HAT 200 .. 1500-S

I_{PN} = 200 .. 1500 A
V_{out} = ± 4 V

For the electronic measurement of currents: DC, AC, pulsed,..., with galvanic separation between the primary circuit and the secondary circuit.

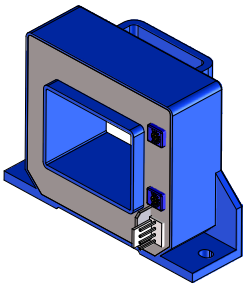

Electrical data

Type	Primary nominal rms current I_{PN} (A)	Primary current, measuring range [1] I_{PM} (A)	RoHS since date code
HAT 200-S	200	± 600	47143
HAT 400-S	400	± 1200	46115
HAT 500-S	500	± 1500	46129
HAT 600-S	600	± 1800	46115
HAT 800-S	800	± 2400	46115
HAT 1000-S	1000	± 2500	46097
HAT 1200-S	1200	± 2500	77271
HAT 1500-S	1500	± 2500	46158

U_C	Supply voltage (± 5 %) [1]	± 15	V
I_C	Current consumption	± 15	mA
R_{IS}	Insulation resistance @ 500 VDC	> 1000	MΩ
V_{out}	Output voltage (Analog) @ ± I_{PN}, R_L = 10 kΩ, T_A = 25 °C	± 4	V
R_{out}	Output internal resistance	100	Ω
R_L	Load resistance	> 10	kΩ

Accuracy - Dynamic performance data

X	Accuracy @ I_{PN}, T_A = 25 °C (excluding offset)	≤ ± 1	% of I_{PN}
ε_L	Linearity error [2] (0 .. ± I_{PN})	≤ ± 1	% of I_{PN}
V_{OE}	Electrical offset voltage @ T_A = 25 °C	< ± 20	mV
V_{OH}	Hysteresis offset voltage @ I_P = 0, after an excursion of 1 x I_{PN}	< ± 10	mV
TCV_{OE}	Temperature coefficient of V_{OE} - 40 °C .. + 80 °C	< ± 1	mV/K
	+ 80 °C .. + 105 °C	< ± 1.5	mV/K
TCV_{out}	Temperature coefficient of V_{out} (% of reading)	< ± 0.1	%/K
t_r	Step response time to 90 % of I_{PN}	< 5	µs
d*i*/d*t*	d*i*/d*t* accurately followed	> 50	A/µs
BW	Frequency bandwidth [3] (- 3 dB)	DC .. 25	kHz

General data

T_A	Ambient operating temperature	- 40 .. + 105	°C
T_S	Ambient storage temperature	- 40 .. + 105	°C
m	Mass	300	g
	Standards	EN 50178: 1997	
		UL 508: 2010 [4]	

Notes: [1] Operating at ± 12 V ≤ U_C < ± 15 V will reduce the measuring range
[2] Linearity data exclude the electrical offset
[3] Please refer to derating curves in the technical file to avoid excessive core heating at high frequency
[4] UL conform is only applicable @ T_A = - 40 °C .. + 85 °C.

Features

- Hall effect measuring principle
- Insulating plastic case recognized according to UL 94-V0.

Advantages

- Easy installation
- Low power consumption
- Small size and space saving
- Only one design for wide current ratings range
- High immunity to external interference.

Applications

- DC motor drives
- Switched Mode Power Supplies (SMPS)
- AC variable speed drives
- Uninterruptible Power Supplies (UPS)
- Battery supplied applications
- Power supplies for welding applications.

Application domain

- Industrial.

N° 74.02.44.000.0, N° 74.02.48.000.0, N° 74.02.50.000.0, N° 74.02.52.000.0
N° 74.02.56.000.0, N° 74.02.60.000.0, N° 74.02.62.000.0, N° 74.02.65.000.0

Current Transducer HAT 200 .. 1500-S

Isolation characteristics

U_d	Rms voltage for AC insulation test, 50 Hz, 1 min	4.9	kV
$\hat{U}_W$	Impulse withstand voltage 1.2/50 µs	> 9.9	kV
		Min	
d_{Cp}	Creepage distance	11	mm
d_{Cl}	Clearance	11	mm
CTI	Comparative tracking index (group IIIa)	275	

Applications examples

According to EN 50178 and IEC 61010-1 standards and following conditions:

- Over voltage category III
- Pollution degree PD2
- Non-uniform field

	EN 50178	IEC 61010-1
d_{Cp}, d_{Cl}, $\hat{U}_W$	Rated insulation voltage	Nominal voltage
Basic insulation	1100 V	1100 V
Reinforced insulation	550 V	550 V

Safety

This transducer must be used in limited-energy secondary circuits according to IEC 61010-1.



This transducer must be used in electric/electronic equipment with respect to applicable standards and safety requirements in accordance with the manufacturer's operating instructions.



Caution, risk of electrical shock

When operating the transducer, certain parts of the module can carry hazardous voltage (eg. primary busbar, power supply).
Ignoring this warning can lead to injury and/or cause serious damage.
This transducer is a build-in device, whose conducting parts must be inaccessible after installation.
A protective housing or additional shield could be used.
Main supply must be able to be disconnected.

Dimensions HAT 200 .. 1500-S (in mm)

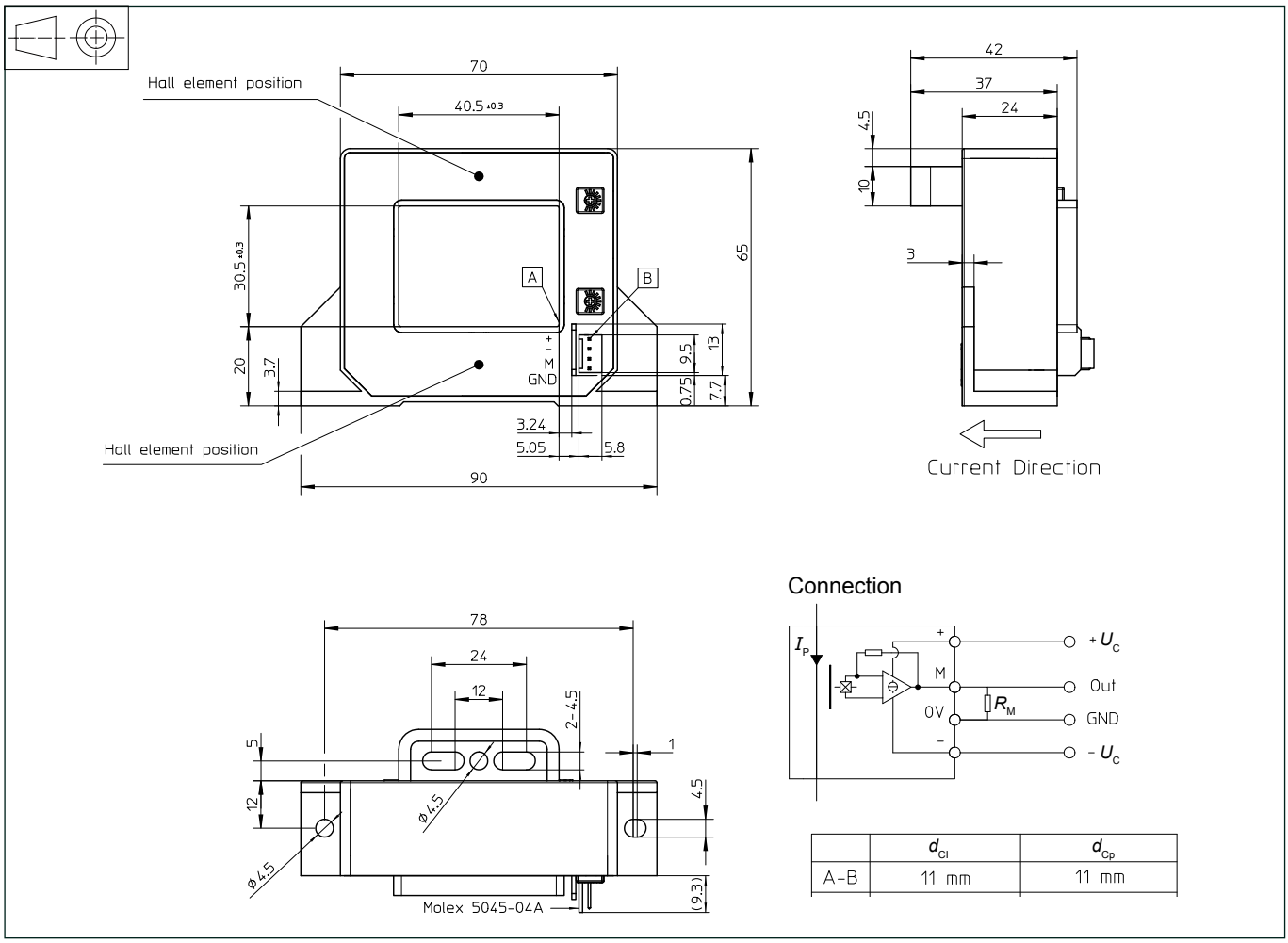

	d_{Cl}	d_{Cp}
A-B	11 mm	11 mm

Mechanical characteristics

- General tolerance ± 1 mm
- Transducer fastening By base-plate
  or on busbar
  with M4 screws
  All slots ∅ 4.5 mm
  Recommended fastening torque 1.2 N·m (± 10 %)
- Connection of secondary Molex 5045-04A

Remarks

- I_s is positive when I_P flows in the direction of the arrow.
- Temperature of the primary conductor should not exceed 105 °C.