TV7105

Temperature sensor with IO-Link

TV7-025CLER14-QFRVG/US

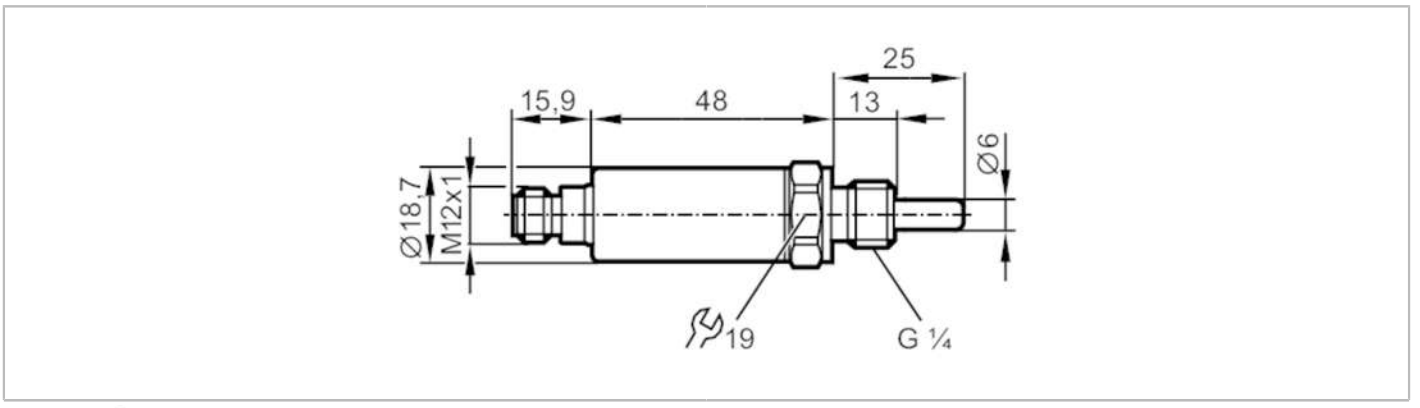

Product characteristics		
Number of inputs and outputs		Number of digital outputs: 2
Measuring range	[°C]	-50...150
Communication interface		IO-Link
Process connection		threaded connection G 1/4 external thread
Installation length EL	[mm]	25
Application		
Special feature		Gold-plated contacts
Measuring element		1 x Pt 1000; (to DIN EN 60751, class A)
Media		liquids and gases
Pressure rating		400 bar | 40 MPa
Note on pressure rating		sensor When mounted in adapters the specifications of the adapter data sheet apply.
Electrical data		
Operating voltage	[V]	18...32 DC; ("supply class 2" to cULus)
Current consumption	[mA]	< 50
Protection class		III
Reverse polarity protection		yes
Power-on delay time	[s]	1
Integrated watchdog		yes
Inputs / outputs		
Number of inputs and outputs		Number of digital outputs: 2
Outputs		
Total number of outputs		2
Output signal		switching signal; IO-Link; (configurable)
Electrical design		PNP/NPN
Number of digital outputs		2
Output function		normally open / normally closed; (parameterisable)
Max. voltage drop switching output DC	[V]	2.5
Permanent current rating of switching output DC	[mA]	100

TV7105

Temperature sensor with IO-Link

TV7-025CLER14-QFRVG/US

Measuring/setting range			
Probe length L	[mm]	12	
Measuring range	[°C]	-50...150	
Set point SP	[°C]	-49.8...150	
Reset point rP	[°C]	-50...149.8	
In steps of	[°C]	0.1	
Resolution			
Resolution of switching output	[K]	0.1	
Accuracy / deviations			
Switch point accuracy	[K]	± 0,3	
Temperature drift per 10 K	[K]	0.1 **)	
Response times			
Dynamic response T05 / T09	[s]	1 / 3; (to DIN EN 60751)	
Software / programming			
Parameter setting options		hysteresis / window; normally open / normally closed; switching logic; switch-on/switch-off delay; Damping; Display unit	
Interfaces			
Communication interface		IO-Link	
Transmission type		COM2 (38,4 kBaud)	
IO-Link revision		1.1	
Operating conditions			
Ambient temperature	[°C]	-40...80	
Note on ambient temperature		at medium temperature: < 125 °C	
		-40...50 °C	
		at medium temperature: < 150 °C	
Storage temperature	[°C]	-40...100	
Protection		IP 69K	
Tests / approvals			
EMC		DIN EN 61000-6-2	
		DIN EN 61000-6-3	
Shock resistance		DIN IEC 68-2-27	50 g (11 ms)
Vibration resistance		DIN EN 60068-2-6	20 g (10...2000 Hz)
MTTF	[years]	542.6	
UL approval		UL Approval no.	K019
Mechanical data			
Weight	[g]	71.5	
Housing		cylindrical	
Dimensions	[mm]	Ø 18.7 / L = 88.9	
Materials		stainless steel (316L/1.4404); FKM	
Materials (wetted parts)		stainless steel (316L/1.4404); O-ring: FKM	
Tightening torque	[Nm]	35	
Process connection		threaded connection G 1/4 external thread	
Probe diameter	[mm]	6	

TV7105

Temperature sensor with IO-Link

TV7-025CLER14-QFRVG/US

Installation length EL	[mm]	25

Remarks

Remarks	The values for accuracy apply to flowing water.
Pack quantity	1 pcs.

Electrical connection

Connector: 1 x M12; coding: A; Contacts: gold-plated



Connection

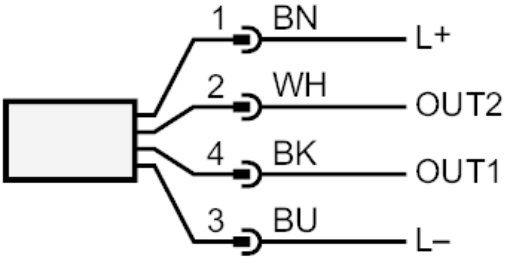

OUT1:	switching output / IO-Link
OUT2:	switching output
	colours to DIN EN 60947-5-2
	Core colours :
BK =	black
BN =	brown
BU =	blue
WH =	white