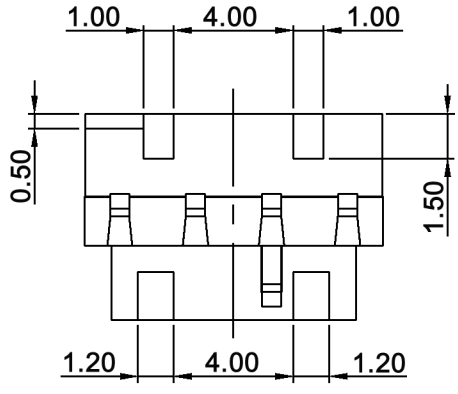

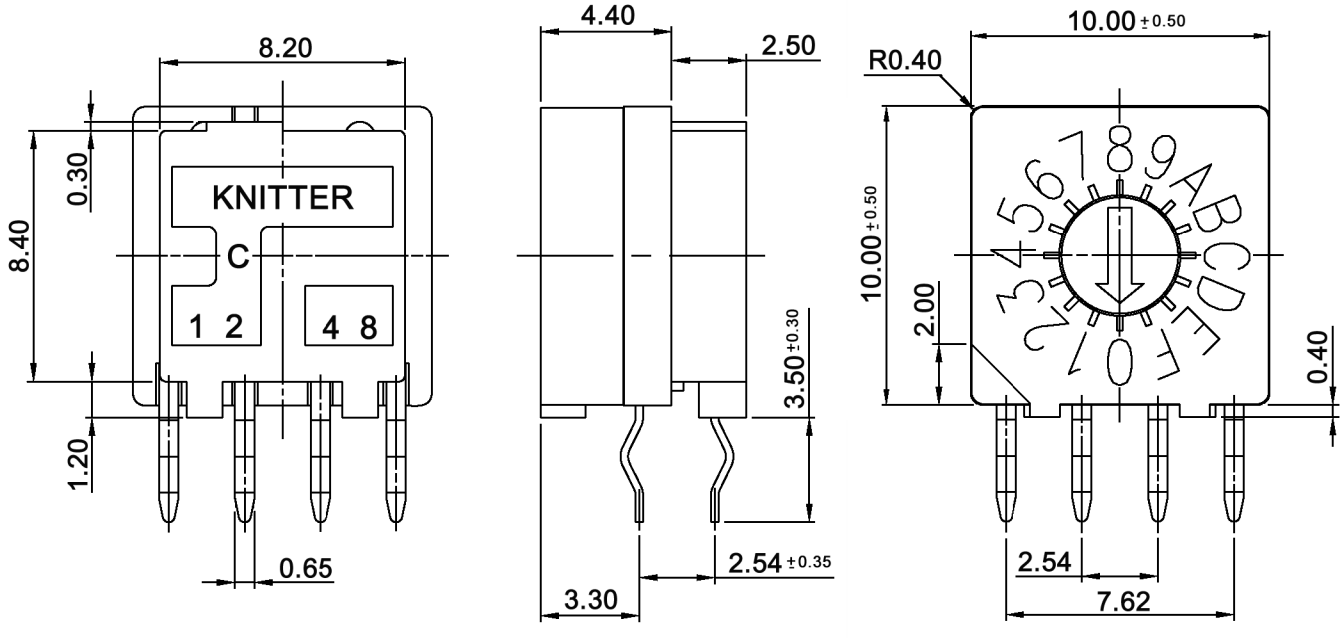

TYPE	CIRCUIT CHARACTERISTIC															
	CODE	POSITION ● ON														
		0	1	2	3	4	5	6	7	8	9	A	B	C	D	E	F
DRR 3016	1		●		●		●		●		●		●		●		●
	2			●	●			●	●			●	●			●	●
	4					●	●	●	●					●	●	●	●
	8									●	●	●	●	●	●	●	●

P.C.B. LAYOUT

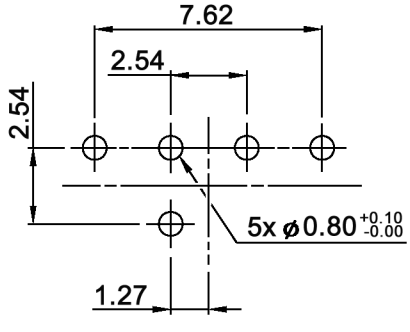

Compliance: RohS II (2011/65/EU)

Tolerances: ±0.20mm max.			Date	Name
			12/07	dr

DRR 3016

Specifications	02/09	dr	knitter-switch	30 13 14	Page 1/2
Dimensions	02/09	dr			
Operating temperature	04/08	dr			
Modifications	Date	Name			

Specifications:

Contact rating:	non-switching: 100mA, 50V DC switching: 30mA, 15V DC
Contact resistance:	100mOhm max.
Insulation resistance:	1 000MOhm min. at 250V DC
Dielectric strength:	250V AC for 1 minute
Operating temperature:	-40°C to +85°C
Mechanical life:	20 000 cycles min.
Operating force:	250 gf.cm max.
Material:	Base / cover: high-temp. thermoplastic nylon UL94V-0, molded black Movable contact: alloy copper, gold plated Actuator: high-temp. thermoplastic nylon UL94V-0, color: yellow O-ring: silicone Spring: stainless steel Terminal: brass, gold plated
Soldering conditions:	wave soldering: 260°C, 5sec. max. through hole reflow: 260 +/-5°C, 4-6sec.

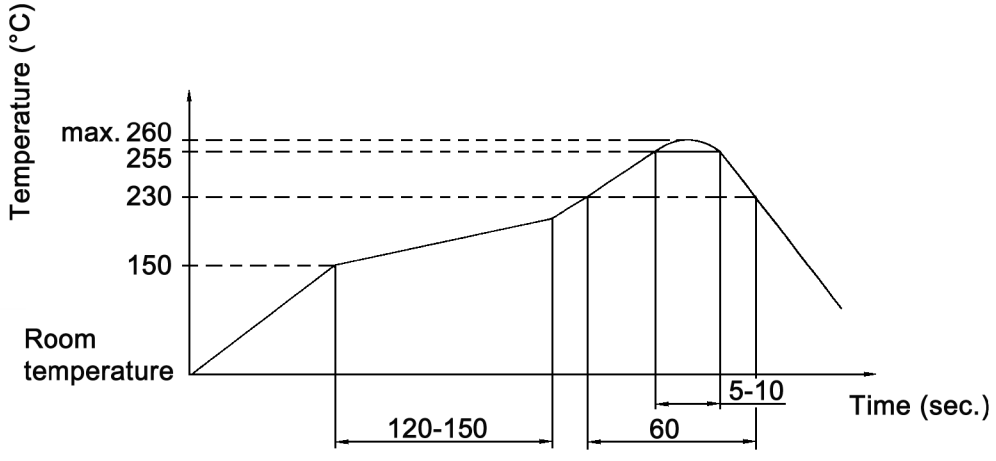

Compliance: RohS II (2011/65/EU)

Tolerances: ±0.20mm max.			Date	Name	DRR 3016	
			02/09	dr		
			knitter-switch		30 13 14	Page 2/2
Modifications	Date	Name				