Kübler

New: 7digit micro totalizer



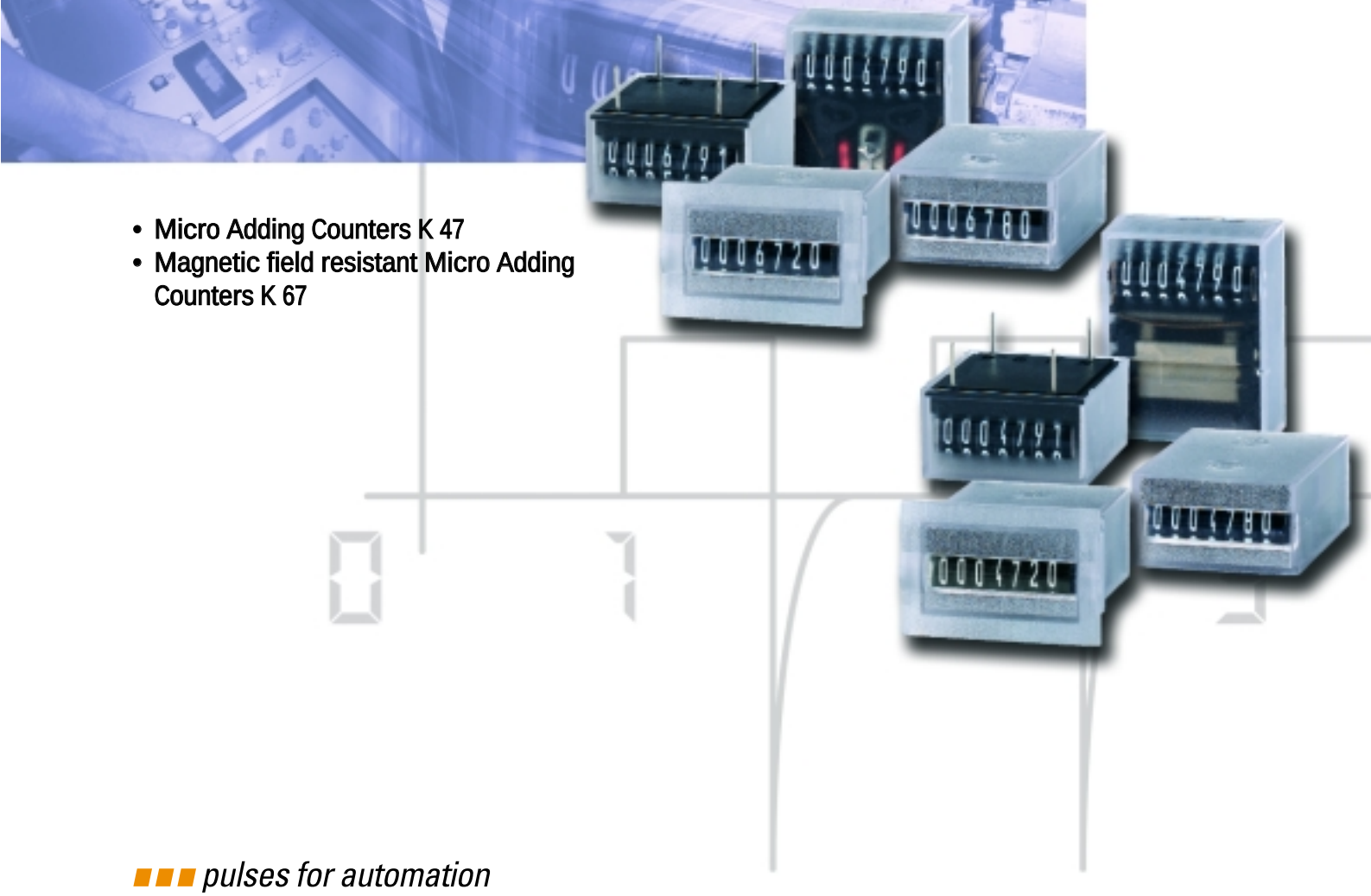

- Micro Adding Counters K 47
- Magnetic field resistant Micro Adding Counters K 67

pulses for automation

New: 7digit micro totalizer

Micro Adding Counter K 47, shock resistant



- 7-digit micro adding counter
- low cost
- **high shock resistance**
- low power consumption; suitable for battery operation
- small dimensions
- magnified large figures
- different mounting solutions
- flush mount with integrated spring clip (snap in)
- PCB-mount versions
- solderable and wash proof
- protection to IP 66
- stores value also at power failure
- long service life (50 x 10^6 impulses)

Applications

charge counting, KWh registration alarm systems, compact units, copiers, fuel dispensers, medical techniques, miniature pumps, dosing techniques, gates general event counting

Technical data:

Electrical connection:	flush mount:	flying leads AWG 22, appr. 150mm long
	PCB-mount:	solder pins ø 0,64 mm
Power consumption:	bis 12 V DC:	appr. 70 mW
	at 24 V DC:	appr. 150 mW
Rated voltage:	1,5/3/4,5/5/6/12/24 V DC –10 % +20 %	
Cuonting frequency:	max. 10 Imp/s (type. 0)	
Pulse duration:	min. 50 ms	
Pulse interval:	min. 50 ms	
Cyclic duration factor:	100 %	
Number of digits:	7	
Counting system:	adding	
Height of figures:	4 x 1,25 mm optical	
Color of figures:	white on black	
Reset:	no reset	
Ambient temperature:	–10 ... +60 °C	
Mounting position:	number wheel view horizontal	
Operating life:	> 50 x 10^6 impulses	

solderable and wash proof typees:	K 47.80, K 47.90, K 47.91
Protection:	IP 66 (K 47.20: frontside only)
Housing:	clear plastic PC (polycarbonate) t
Weight:	12 ... 15 g
Options:	
K 47.20, K 47.80:	flat pin 0,8 x 2,8 mm with push on connectors
K 47.20:	solder pins ø 0,64 mm
K 47.80:	flying leads AWG 22 appr. 150 mm long
K 47.9 ... 71	type with spacer (Height 6 mm for component superstruction on PCB)
Options:	
	– different voltages
	– counting frequency >10 Imp/s
	– different color of figures
	– temperature range –30 ... +85 °C

Type series:

Type	Display	El. connection	Description
K 47.20	small side	flying leads	flush mount with latch
K 47.80	small side	solder pins	PCB-mount wash proof
K 47.90	large side		
K 47.91	small side		

Ordering information:
– article number
– for Options please give exact counter type, voltage and option, e.g.
K 47.20, 9 V DC/0 temperature range –20 °C ... +70 °C

Type K 47.20



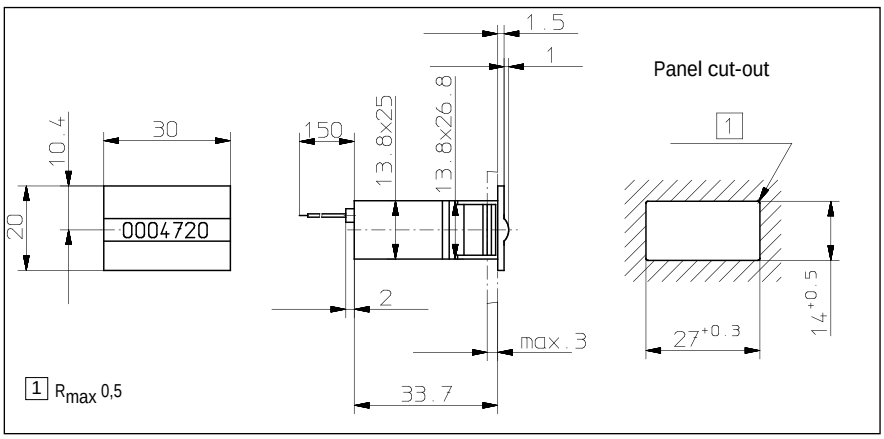

K 47.20	1,5 V Art.No.	3 V Art.No.	4,5 V Art.No.	5 V Art.No.	6 V Art.No.	12 V Art.No.	24 V Art.No.
DC (10 imp/s)	1.710.200.002	1.710.200.006	1.710.200.008	1.710.200.009	1.710.200.010	1.710.200.012	1.710.200.013

New: 7digit micro totalizer

Kübler

Type K 47.80



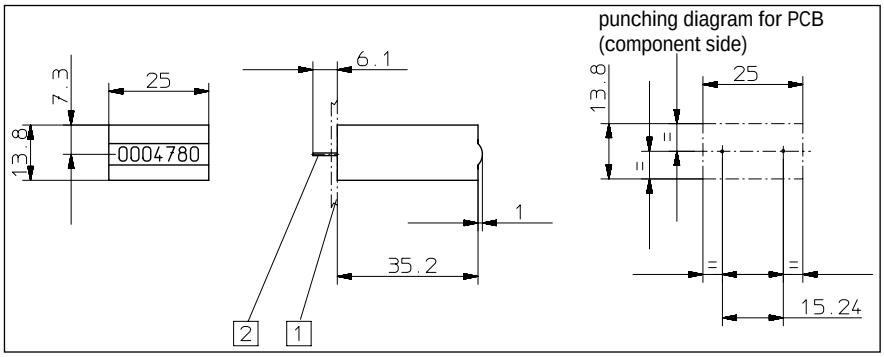

1 PCB 2 coil connections ø 0,64

K 47.80	1,5 V Art.No.	3 V Art.No.	4,5 V Art.No.	5 V Art.No.	6 V Art.No.	12 V Art.No.	24 V Art.No.	
DC (10 imp/s)	1.710.800.002	1.710.800.006	1.710.800.008	1.710.800.009	1.710.800.010	1.710.800.012	1.710.800.013	

Type K 47.90



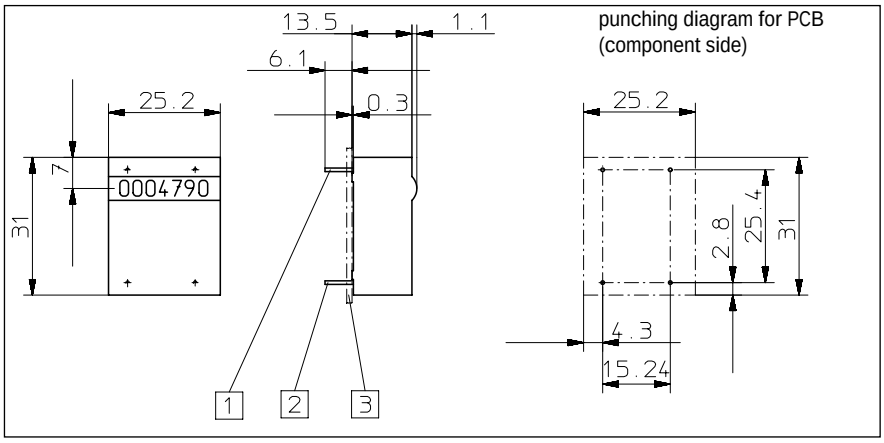

1 mounting pin without el. function ø 0,64 2 coil connections ø 0,64 3 PCB

K 47.90	1,5 V Art.No.	3 V Art.No.	4,5 V Art.No.	5 V Art.No.	6 V Art.No.	12 V Art.No.	24 V Art.No.	
DC (10 imp/s)	1.710.900.002	1.710.900.006	1.710.900.008	1.710.900.009	1.710.900.010	1.710.900.012	1.710.900.013	

Type K 47.91



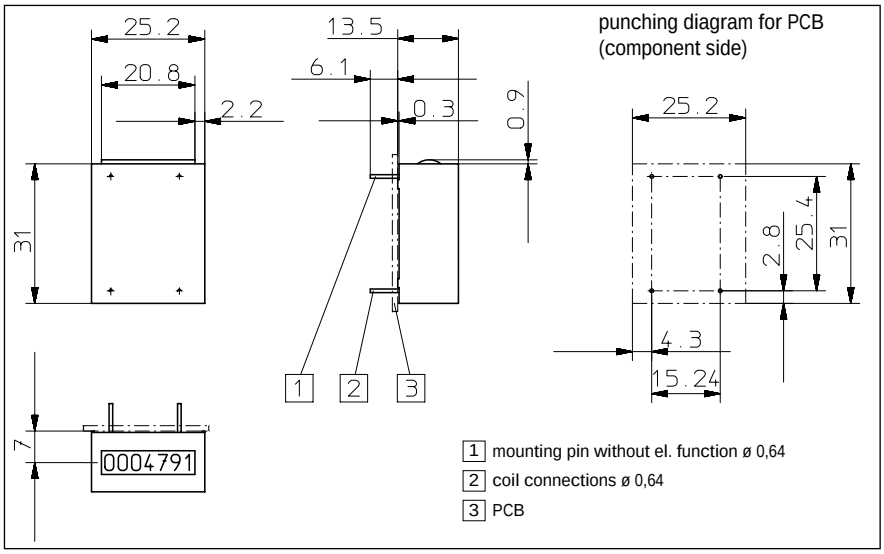

K 47.90	1,5 V Art.No.	3 V Art.No.	4,5 V Art.No.	5 V Art.No.	6 V Art.No.	12 V Art.No.	24 V Art.No.	
DC (10 imp/s)	1.710.910.002	1.710.910.006	1.710.910.008	1.710.910.009	1.710.910.010	1.710.910.012	1.710.910.013	

New: 7digit micro totalizer

Micro Adding Counter K 67, shock and magnetic field resistant



- 7-digit micro adding counter
- **magnetic resistant due to patented copper moving parts system**
- **highest shock resistance with patented anti shock system**
- low power consumption; suitable for battery operation
- magnified large figures
  different mounting solutions
- flush mount with integrated spring clip (snap in)
- PCB-mount
- solderable and wash proof versions
- Protection to IP 66
- maintenance at voltage failure
- long service life (50x 10^6 impulses)

Applications

charge counting, KWh registration , alarm systems, compact units,copy machines, fuel dispensers because of the magnetic field resistance (especially suitable for account function, general event counting, rending machines.

Technical data:

Electrical connection:	flush mount:	flying leads AWG 22 appr. 150 mm
	PCB-mount:	solder pins ø 0,64 mm
Power consumption: (at 20 °C) at 12 V DC:	bis 6 V DC:	appr. 70 mW
	appr. 120 mW	
	at 24 V DC:	appr. 500 mW
Rated voltage:	1,5/3/4,5/5/6/12/24 V DC –10 % +20 %	
Counting frequency:	max. 10 Imp/s (type. 0)	
Pulse duration:	min. 50 ms	
Pulse interval:	min. 50 ms	
Cyclic duration factor:	100 %	
Number of digits:	7	
Counting system:	adding	
Height of figures:	4 x 1,25 mm optical	
Color of figures:	white on black	
Reset:	no reset	
Ambient temperature:	–10 ... +60 °C	
Mounting position:	number wheel view horizontal	

Operating life:	> 50 x 10^6 impulses
Solderable and wash proof:	K 67.80, K 67.90, K 67.91
Protection:	IP 65 (K 67.20: frontside only)
Housing:	clear plastic PC (polycarbonat) types with protection IP 65 are sealed in
Weight:	9 ... 11 g

Options	
K 67.20, K 67.80: connectors	flat pin 0,8 x 2,8 mm and push on
K 67.20:	solder pins ø 0,64 mm
K 67.80:	flying leads AWG 22 appr. 150 mm long
K 67.9 ... 71	type with spacer (Height 6 mm for component superstruction on PCB) – different voltages – counting frequency >10 Imp/sec – different color of figures – temperature range –30 ... +85 °C

Type series:

Type	Display	El. connection	Description
K 67.20	small side	flying leads	flush mount with latch
K 67.80	small side	solder pins	PCB-mount wash proof
K 67.90	large side		
K 67.91	small side		

Ordering information:
– article number 1.680.9X0.XXX
– for options please give exact counter type, voltage and option, e.g.
K 67.20, 9 V DC/0 temperature range –20 °C ... +70 °C

Type K 67.20



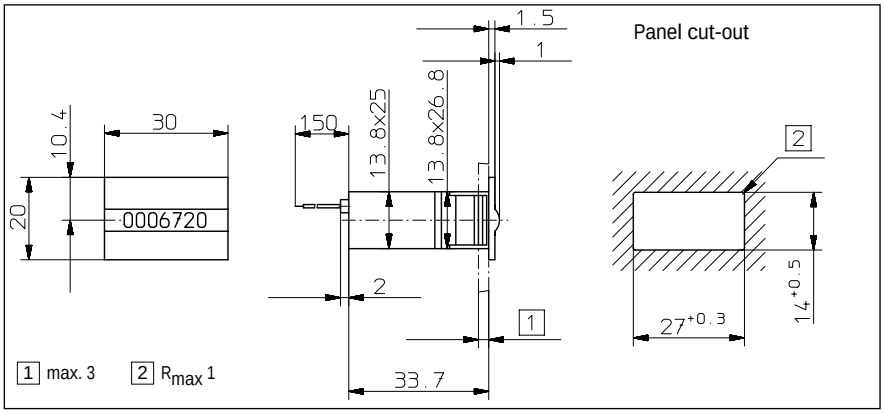

K 67.20	1,5 V Art.No.	3 V Art.No.	4,5 V Art.No.	5 V Art.No.	6 V Art.No.	12 V Art.No.	24 V Art.No.
DC (10 imp/s)	1.660.200.002	1.660.200.006	1.660.200.008	1.660.200.009	1.660.200.010	1.660.200.012	1.660.200.013

New: 7digit micro totalizer

Type K 67.80



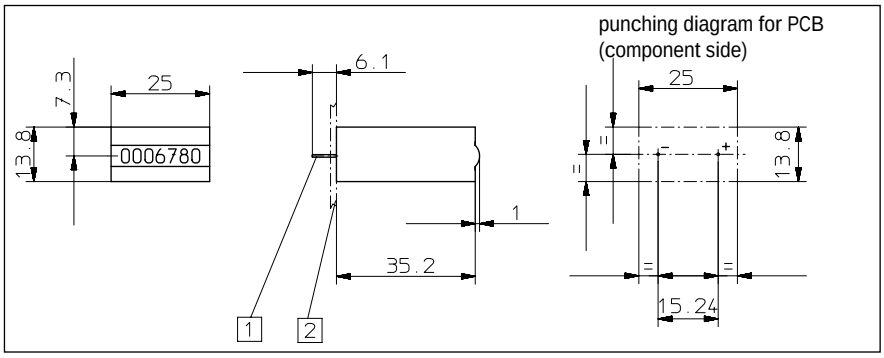

1 PCB 2 coil connections ø 0,64

K 67.80	1,5 V Art.No.	3 V Art.No.	4,5 V Art.No.	5 V Art.No.	6 V Art.No.	12 V Art.No.	24 V Art.No.	
DC (10 imp/s)	1.660.800.002	1.660.800.006	1.660.800.008	1.660.800.009	1.660.800.010	1.660.800.012	1.660.800.013	

Type K 67.90



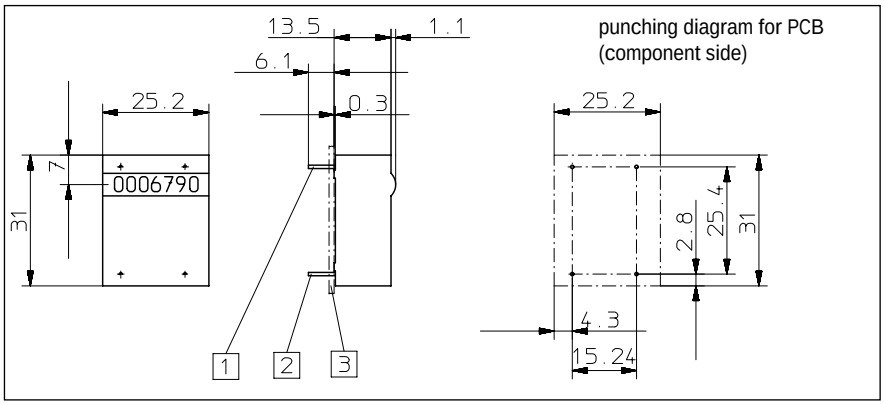

1 mounting pin without el. function ø 0,64 2 coil connections ø 0,64 3 PCB

K 67.90	1,5 V Art.No.	3 V Art.No.	4,5 V Art.No.	5 V Art.No.	6 V Art.No.	12 V Art.No.	24 V Art.No.	
DC (10 imp/s)	1.660.900.002	1.660.900.006	1.660.900.008	1.660.900.009	1.660.900.010	1.660.900.012	1.660.900.013	

Type K 67.91



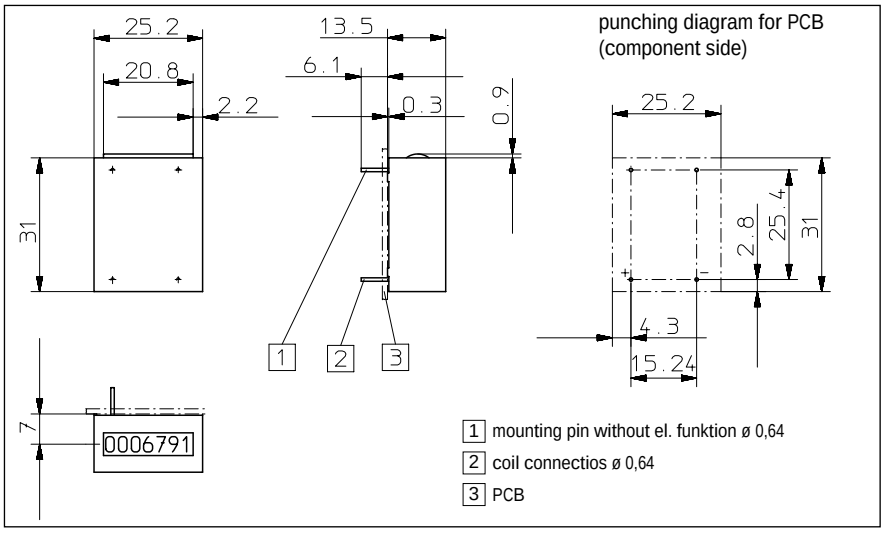

K 67.91	1,5 V Art.No.	3 V Art.No.	4,5 V Art.No.	5 V Art.No.	6 V Art.No.	12 V Art.No.	24 V Art.No.	
DC (10 imp/s)	1.660.910.002	1.660.910.006	1.660.910.008	1.660.910.009	1.660.910.010	1.660.910.012	1.660.910.013	

Fritz Kübler GmbH
Zähl- und Sensortechnik
P.O. BOX 3440
D-78023 Villingen-Schwenningen
GERMANY
Tel.: +49 -(0) 77 20 - 39 03 - 0
Fax.: +49 -(0) 77 20 - 2 15 64
sales@kuebler.com
www.kuebler.com

– Subjet to change without prior notice –

R.600.153 04 200 02 ES