Type: LDRT

Mains Restoration "Brown Out" Auto Restart Timer (Delay On Operate)

Terminal Protection to IP20



Dims: to DIN 43880
W. 17.5mm

- Detects voltage dips and momentary loss/interruption of supply
- "Delay on operate" functionality provides an adjustable delay period before the relay energises
- Fixed Under voltage trip level (80% of Un)
- Adjustable time delay (2 – 60s)
- Fixed reset time (100ms)
- SPDT relay output 8A
- Green LED indication for supply status
- Red LED indication for timing and relay status
- Compact 17.5mm DIN rail housing
- Ideal for water authorities where remote pumping stations and unmanned control systems are in use

QMS ISO 9001 REGISTERED
ISO 9001:2015
Cert. No. 14125771

FUNCTION DIAGRAM

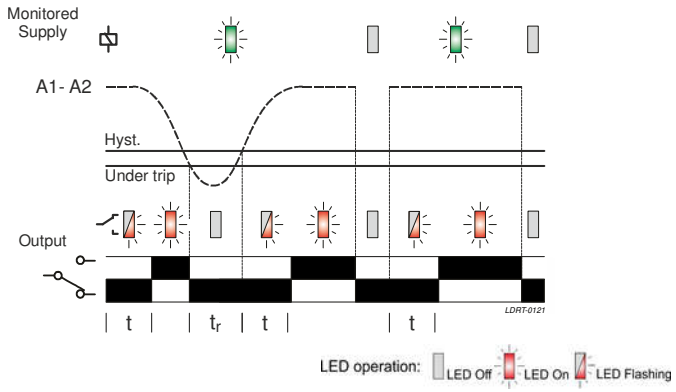

INSTALLATION AND SETTING

Installation work must be carried out by qualified personnel.

- BEFORE INSTALLATION, ISOLATE THE SUPPLY.
- Connect the unit as required. The Connection Diagram below shows a typical installation, whereby the supply to a load is being monitored by the unit. If a fault should occur (i.e. fuse blowing), the relay will de-energise and assuming control of the external Contactor, de-energise the Contactor as well.

Applying power.

- Apply power and the green LED ❶ will illuminate. The relay will remain de-energised.
- Assuming the supply voltage is above the fixed trip level (plus hysteresis) the delay period (t) will commence and the red LED ❷ will flash during this period.
- After the set delay has elapsed, the relay will energise and red LED ❷ remain on.

Setting the unit

- Set the "Delay (t)" ❸ adjustment as required.

Troubleshooting.

The table below shows the status of the unit during a particular condition.

Supply status	Green LED ❶	Red LED ❷	Relay
No supply	Off	Off	De-energised
Under voltage condition	On	Off	De-energised
Following supply loss or voltage returning > 80% of Un	On	Flashing	De-energised for delay period (t)

TECHNICAL SPECIFICATION

^ Please state supply voltage when ordering

Supply/monitoring voltage Un^ **(A1, A2):**	115, 230V AC	
Frequency range:	48 – 63Hz	
Supply variation:	75 – 115% Un	
Overvoltage category:	III (IEC 60664)	
Rated impulse withstand voltage:	2.5kV (115V), 4kV (1.2/50µS) IEC 60664	
Power consumption (max.):	11VA @ 1.15 x Un	
Monitoring mode:	Under voltage	
Trip levels:		
Under:	80% of Un (Fixed)	
Trip accuracy:	± 5%	
Hysteresis:	≈ 5% of fixed trip level (factory set)	
Time delay (t):	2 – 60s (± 5%)	
Setting accuracy:	± 5%	
Repeat accuracy:	± 0.5% at constant conditions	
Reset time (t_r):	≈ 100ms	
LED indication:	Green LED (Power supply) Red LED (Relay/timing status)	
Ambient temperature:	-20 to +60°C	
Relative humidity:	+95% max.	
Output **(15, 16, 18)**:	SPDT relay	
Output rating:	AC1	250V 8A (2000VA)
	AC15	250V 5A (no), 3A (nc)
	DC1	25V 8A (200W)
Electrical life:	≥ 150,000 ops at rated load	
Dielectric voltage:	2kV AC (rms) IEC 60947-1	
Rated impulse withstand voltage:	4kV (1.2/50µS) IEC 60664	
Housing:	Orange flame retardant UL94	
Weight:	61g	
Mounting option:	On to 35mm symmetric DIN rail to BS EN 60715 or direct surface mounting via 2 x M3.5 or 4BA screws using the black clips provided on the rear of the unit.	
Terminal conductor size	≤ 2 x 2.5mm² solid or stranded	
Terminal screw:	M3 (Designed for use with **PZ1** "pozi-driver")	
Tightening torque:	0.6Nm Max.	
Approvals:	Conforms to IEC. CE, ✔ and RoHS Compliant. EMC: Immunity: EN 61000-6-2 Emissions: EN 61000-6-4	

CONNECTION DIAGRAM

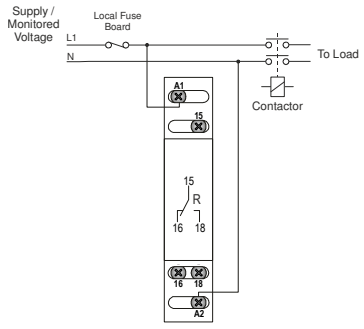

SETTING DETAILS

1. Supply status (Green) LED
2. Relay output/timing status (Red) LED
3. "Delay (t)" adjustment

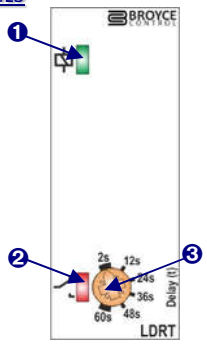

DIMENSIONS

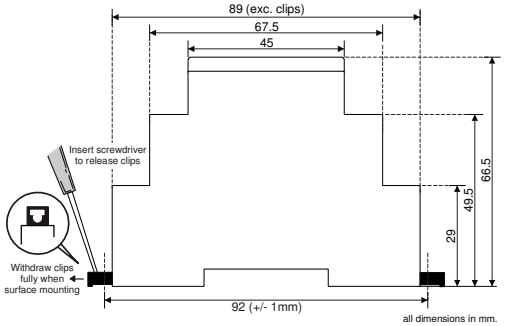

Broyce Control Ltd., Pool Street, Wolverhampton, West Midlands WV2 4HN. England
Tel: +44 (0) 1902 773746 Fax: +44 (0) 1902 420639 Email: sales@broycecontrol.com Web: www.broycecontrol.com

The Information provided in this literature is believed to be accurate (subject to change without prior notice); however, use of such information shall be entirely at the user's own risk.