E12566

Connecting cable with AMP connector

ADOGX060--A005E06

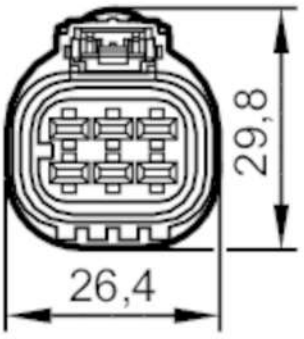

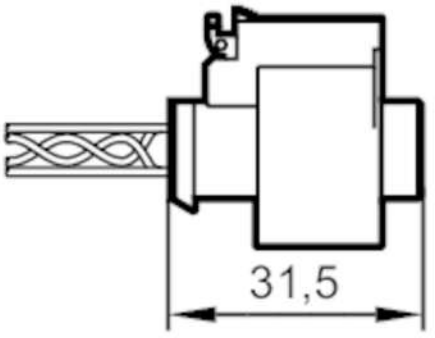

CE

Electrical data		
Operating voltage	[V]	12...24 DC
Operating conditions		
Ambient temperature	[°C]	-40...100
Ambient temperature (moving)	[°C]	-40...100
Mechanical data		
Weight	[g]	576.5
Materials		PBT
Remarks		
Pack quantity		1 pcs.

E12566

Connecting cable with AMP connector

ADOGX060--A005E06

Electrical connection

Cable: 5 m, PVC; 4 x 2.5 mm² + 2 x 0.5 mm²

Electrical connection - socket

Connection

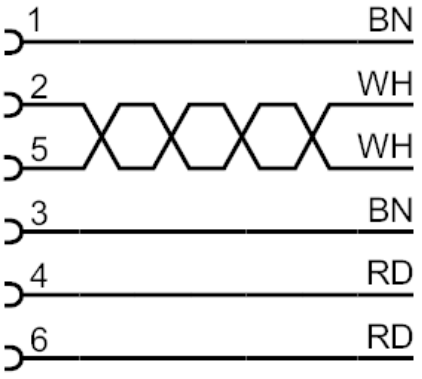

	Core colours :
BN =	brown
RD =	red
WH =	white

Connector: 1 x AMP connector, straight; Contacts: nickel-plated