PT5014

Pressure transmitter

PT-016-SEG14-A-ZVG/VE

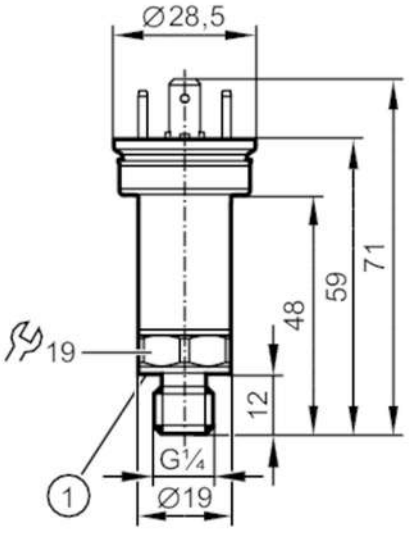

1 Sealing

Product characteristics			
Number of inputs and outputs	Number of analogue outputs: 1		
Measuring range	0...16 bar	0...232 psi	0...1.6 MPa
Process connection	threaded connection G 1/4 external thread (DIN EN ISO 1179-2)		
Application			
Measuring element	metallic thin film cell		
Application	for mobile applications; for industrial applications		
Media	liquids and gases		
Medium temperature [°C]	-40...125		
Min. bursting pressure	450 bar	6525 psi	45 MPa
Pressure rating	40 bar	580 psi	4 MPa
Note on pressure rating	static		
Vacuum resistance	-1000 mbar	-0.1 MPa	
Type of pressure	relative pressure		
Electrical data			
Operating voltage [V]	8...36 DC		
Min. insulation resistance [MΩ]	100; (500 V DC)		
Protection class	III		
Reverse polarity protection	yes		
Power-on delay time [s]	< 0.1		
Inputs / outputs			
Number of inputs and outputs	Number of analogue outputs: 1		
Outputs			
Output signal	analogue signal		
Number of analogue outputs	1		
Analogue current output [mA]	4...20		

PT5014

Pressure transmitter

PT-016-SEG14-A-ZVG/VE

Max. load [Ω]	(Ub - 8 V) / 21,5 mA ; @8V= 0 Ω ; @12V max. 200 Ω: @24V max. 750 Ω		
Short-circuit proof	yes		
Overload protection	yes		
Measuring/setting range			
Measuring range	0...16 bar	0...232 psi	0...1.6 MPa
Accuracy / deviations			
Repeatability [% of the span]	< ± 0,05; (with temperature fluctuations < 10 K)		
Characteristics deviation [% of the span]	< ± 0,5; (incl. drift when overtightened, zero point and span error, non-linearity, hysteresis)		
Linearity deviation [% of the span]	< ± 0,1 (BFSL) / < ± 0,2 (LS)		
Hysteresis deviation [% of the span]	< ± 0,2		
Long-term stability [% of the span]	< ± 0,1; (per 6 months)		
Temperature coefficient zero point [% of the span / 10 K]	< ± 0,1 (0...80 °C); < ± 0,2 (-40...0 °C / 80...125 °C)		
Temperature coefficient span [% of the span / 10 K]	< ± 0,1 (0...80 °C); < ± 0,2 (-40...0 °C / 80...125 °C)		
Response times			
Step response time analogue output [ms]	2		
Operating conditions			
Ambient temperature [°C]	-40...100		
Storage temperature [°C]	-40...100		
Protection	IP 67		
Tests / approvals			
EMC	Compliant with ECE R 10, rev. 5	(E1 compliant)	
	DIN EN ISO 13766-1 : 2018	earthworks and construction machines	
	DIN EN ISO 14982 : 2009	agricultural and forestry machines	
	ISO 11452-2	100 V/m	
	ISO 7637-2 : 2011 pulse 1	Test severity III. function state C	
	ISO 7637-2 : 2011 pulse 2b	test severity IV. function state C	
	DIN EN 61326-1		
Shock resistance	DIN EN 60068-2-27	500 g (1 ms)	
Vibration resistance	DIN EN 60068-2-6	20 g (10...2000 Hz)	
MTTF [years]	715		
UL approval	UL Approval no.	J032	
	File number UL	E174189	
Pressure Equipment Directive	Sound engineering practice; can be used for group 2 fluids; group 1 fluids on request		
Mechanical data			
Weight [g]	67		
Housing	cylindrical		
Dimensions [mm]	Ø 19 / L = 71		
Materials	stainless steel (630/1.4542/17-4 PH); stainless steel (316L/1.4404); PPS		

PT5014

Pressure transmitter

PT-016-SEG14-A-ZVG/VE

Materials (wetted parts)		stainless steel (630/1.4542/17-4 PH); stainless steel (303/1.4305)
Min. pressure cycles		60 million; (at 1.2 times nominal pressure)
Tightening torque	[Nm]	25...35; (recommended tightening torque; depends on lubrication, seal and pressure rating)
Process connection		threaded connection G 1/4 external thread (DIN EN ISO 1179-2)
Process connection sealing		FKM (DIN EN ISO 1179-2)
Restrictor element integrated		yes

Remarks

Remarks	BFSL = Best Fit Straight Line
	LS = limit value setting
Pack quantity	1 pcs.

Electrical connection

Connector: 1 x valve plug type A DIN (EN175301-803-A)



Connection

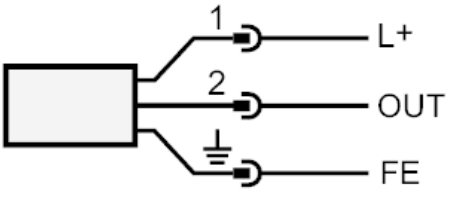

OUT	analogue output
FE	functional earth

PT5014

Pressure transmitter

PT-016-SEG14-A-ZVG/VE

Diagrams and graphs

characteristic load curve of current output

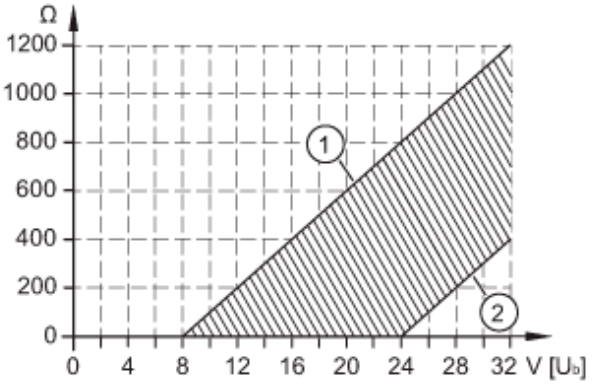

1: Max. load

2: min. load