Product Data Sheet

9295414101
VWS0143XULCS
6224 N

ebmpapst
The engineer's choice



GREEN TECH

6224 N

INDEX

1 General 3
2 Mechanics 3
2.1 General 3
2.2 Connections 3
3 Operating Data 4
3.1 Electrical Operating Data 4
3.2 Electrical Features 5
3.3 Aerodynamics 6
3.4 Sound Data 7
4 Environment 7
4.1 General 7
4.2 Climatic Requirements 7
5 Safety 8
5.1 Electrical Safety 8
5.2 Approval Tests 8
6 Reliability 8
6.1 General 8

1 General

Fan type	Fan	
Rotating direction looking at rotor	Counterclockwise	
Airflow direction	Air outlet over struts	
Bearing system	Ball bearing	
Mounting position - shaft	Any	

2 Mechanics

2.1 General

Depth	51,0 mm	
Diameter	172,0 mm	
Mass	0,780 kg	
Housing material	Metal	
Impeller material	Plastic	
Max. torque when mounted across both mounting flanges Screw size	Wire outlet corner: 600 Ncm Remaining corners: 600 Ncm ISO 4762 - M4 degreased, without an additional brace and without washer	

2.2 Connections

Electrical connection	Plug	
Lead wire length Tolerance	See drawing	
Plug	See drawing	
Contact	See drawing	

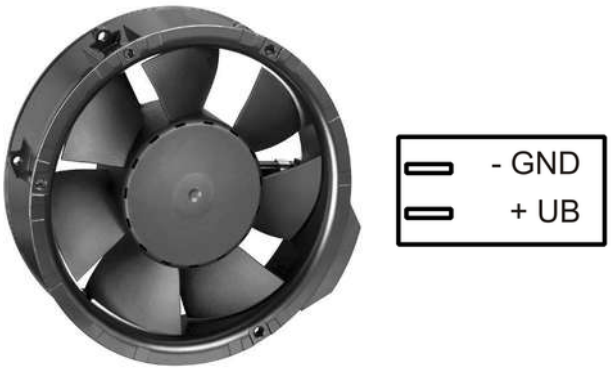

3 Operating Data

3.1 Electrical Operating Data

Measurement conditions: Normal air density = 1,2 kg/m3; Temperature 23℃ +/ - 3℃; Motor axis horizontal; warm-up time before measuring 5 minutes (unless otherwise specified). In the intake and outlet area should not be any solid obstruction within 0,5 m.

Δp = 0: corresp. to free air flow (see chapter aerodynamics)
I: corresp. to arithm. mean current value

Note:
No inrush current at Unom means:

The internal electrolytic capacitor 120uF/50V has no resistor or inrush current limitation, essentially the power supply and the type and length of the connecting cable is limiting the Inrush current.

Features	Condition	Symbol	Values		
Voltage range		U	12,0 V		28,0 V
Nominal voltage		U_N		24,0 V	
Power consumption Tolerance	Δp = 0 0010	P	3,5 W +- 25 %	17 W +- 25 %	22 W +- 20 %
Current consumption Tolerance	Δp = 0 0010	I	300 mA +- 25 %	710 mA +- 25 %	800 mA +- 20 %
Speed Tolerance	Δp = 0 0010	n	1.750 1/min +- 10 %	3.400 1/min +- 10,0 %	3.850 1/min +- 10 %
Starting current consumption				4.000 mA	

No inrush current means: Inrush current is mainly affected by length and kind of connecting line 120uF

3.2 Electrical Features

Electronic function	None	
Reversed polarity protection Max. residual current at U_N	Rectifying diode I_F <= 10 mA	
Locked rotor protection	Auto restart	
Locked rotor current at U_N	I_{block} approx. 4.000 mA	
Clock signal at locked rotor	t_3 / t_4 typical: 1,4 s / 5,3 s	

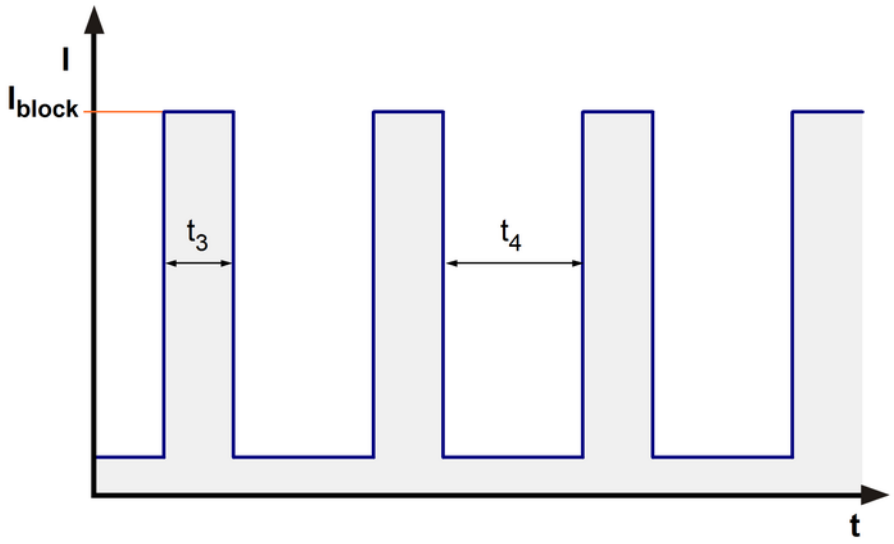

Internal Fuse:
Littlefuse NANO2(R) FUSE; Very fast acting 451 Series; 4 A (Art.-Nr.: 451004)

Max. current when decelerate at Unom. aprox 3.500 mA peak.

3.3 Aerodynamics

Measurement conditions:	Measured with a double chamber intake rig acc. to DIN EN ISO 5801. Normal air density = 1,2 kg/m3; Temperature 23℃ +/ - 3℃; In the intake and outlet area should not be any solid obstruction within 0,5 m. Motor shaft horizontal. The information is only valid under the specified test conditions and may be changed by the installation conditions. If there are deviations from the standard test conditions, the characteristic values must be checked under the installed conditions.

a.) Operation condition:

3.400 1/min at free air flow

Max. free-air flow (Δp = 0 / V̇ = max.)	390,0 m3/h	
Max. static pressure (Δp = max. / V̇ =0)	180 Pa	

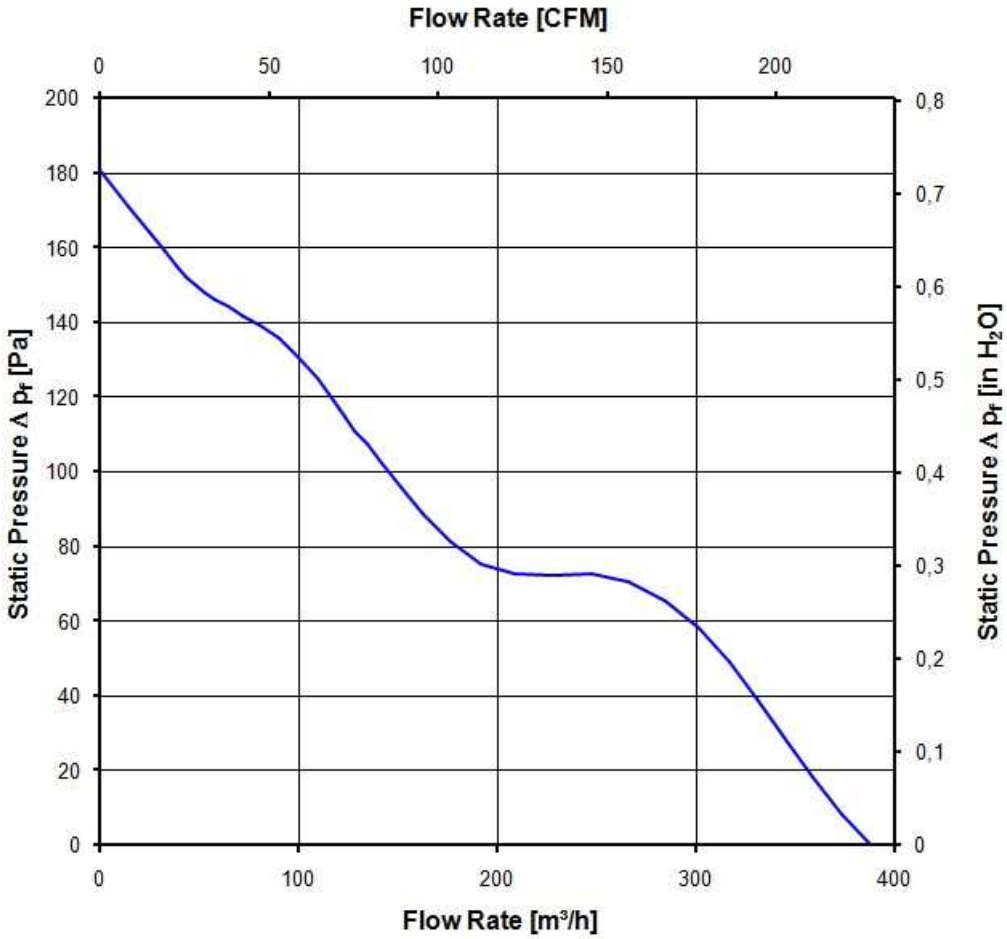

3.4 Sound Data

Measurement conditions:	Sound pressure level: 1 meter distance between microphone and the air intake. Sound power level: Acc. to DIN 45635 part 38 (ISO 10302) Measured in a semianchoic chamber with a background noise level of Lp(A) < 5 dB(A) For further measurement conditions see chapter aerodynamics.

a.) Operation condition:

3.400 1/min at free air flow

Optimal operating point	285,0 m3/h @ 58 Pa	
Sound power level at the optimal operating point	6,1 bel(A)	
Sound pressure level at free air flow, measured in rubber bands	55,0 dB(A)	

4 Environment

4.1 General

Min. permitted ambient temperature TU min.	-20 °C	
Max. permitted ambient temperature TU max.	72 °C	
Min. permitted storage temperature TL min.	-40 °C	
Max. permitted storage temperature TL max.	80 °C	

4.2 Climatic Requirements

Humidity requirements	humid heat, constant; according to DIN EN 60068-2-78, 14 days	
Water exposure	None	
Dust requirements	None	
Salt fog requirements	None	

Permitted application area:
The product is intended for use in sheltered rooms with controlled temperature and controlled humidity. Directly exposure to water must be avoided.

Pollution degree 1 (according DIN EN 60664-1)
There is either no pollution or it occurs only dry, non-conductive pollution. The pollution has no negative impact.

Please require severity levels and specification parameters from the responsible development departments.

5 Safety

5.1 Electrical Safety

Dielectric strength DIN EN 60950 (VDE 0805) and DIN EN 60335 (VDE 0700) A.) Type test Measuring conditions: After 48h of storage at 95% R.H. and 25℃. No arcing or breakdown is allowed! All connections together to ground. B.) Routine test Measuring conditions: At indoor climate. No arcing or breakdown is allowed! All connections together to ground.	500 VAC / 1 Min. 850 VDC / 1 Sec.	
Isolation resistance Measuring conditions: After 48h of storage at 95% R.H. and 25℃ measured with U=500 VDC for 1 min.	RI > 10 MOhm	
Clearance / creepage distance	1,0 mm / 1,2 mm	
Protection class	III	

5.2 Approval Tests

CE	EC Declaration of Conformity	Yes
EAC	Eurasian Conformity	Yes
UL	Underwriters Laboratories	Yes / UL507, Electric Fans E38324
VDE	Association for Electrical, Electronic and Information Technologies	Yes / Approval acc. to EN 60950 (VDE 0805) - Information technology equipment
CSA	Canadian Standards Association	Yes / C22.2 No. 113 Fans and Ventilators
CCC	China Compulsory Certification	Not applicable

6 Reliability

6.1 General

Life expectancy L10 at TU = 40 ℃	75.000 h	
Life expectancy L10 at TU max.	35.000 h	
Life expectancy L10 acc. to IPC 9591 at TU = 40 ℃	127. 500 h	

Copying of this document, and giving it to others and the use or communication of the contents thereof, are forbidden without express authority. Offenders are liable to the payment of damages. All rights are reserved in the event of the grant of a patent or the registration of a utility model or design.

Schutzvermerk nach DIN ISO 16016 beachten/
Refer to protection notice DIN ISO 16016!

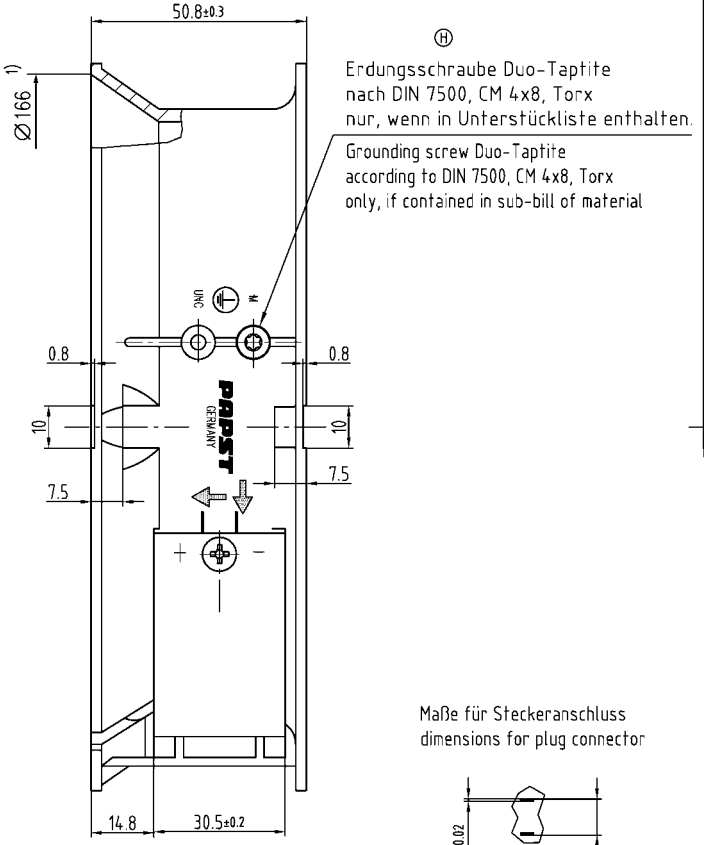

Ⓗ
Erdungsschraube Duo-Taptite
nach DIN 7500, CM 4x8, Torx
nur, wenn in Unterstückliste enthalten.

Grounding screw Duo-Taptite
according to DIN 7500, CM 4x8, Torx
only, if contained in sub-bill of material

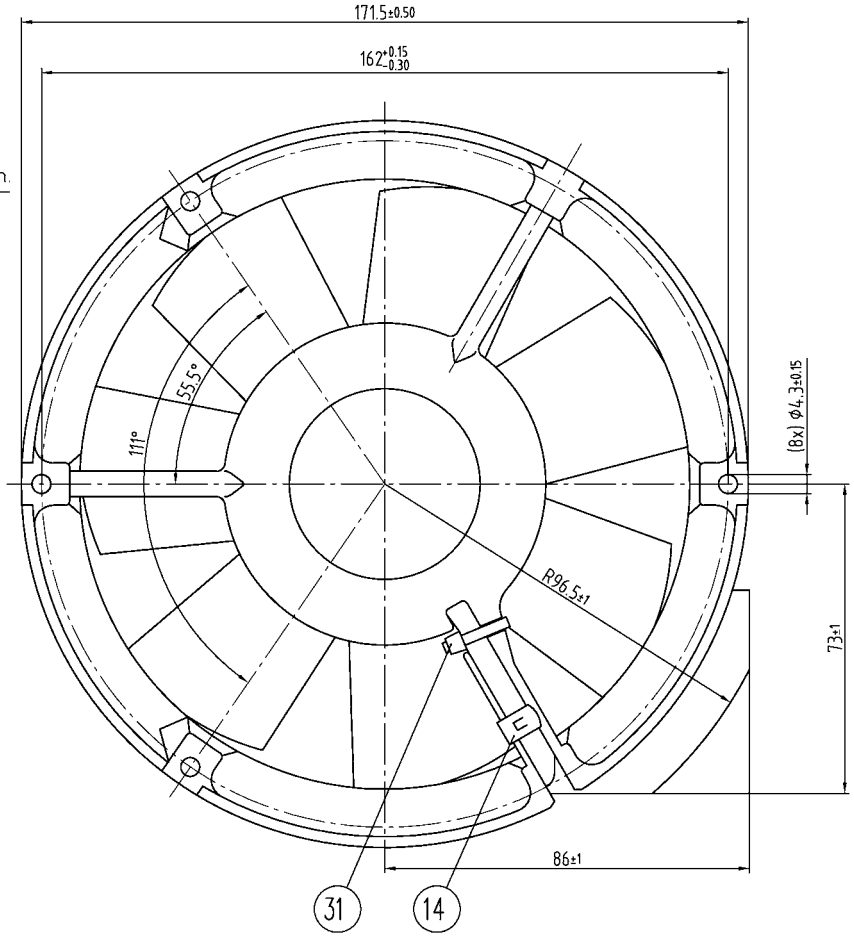

Maße für Steckeranschluss
dimensions for plug connector

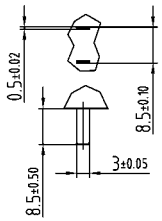

- Axialspiel: mit Feder spielfrei verspannt
1) Maße für Montagewand

- without axial clearance by a pre-loaded spring
1) dimensions for assembly wall

			ebmpapst	Werkstoff/Material:	Volumen/Volume [mm³]:
SAP-Status/State	Aend.-Nr./Change-No.	AutoCAD-System-Version	CAD-Umgebung/ CAD-Environment		Gewicht/Mass [g]:
		Datum/Date	Name/Name		
		Bearb./ Drawn		Artikel/Title	
Tolerierung/Tolerances:		Gepr./ Checked			
Allgemeintoleranzen/Gen. tolerances:		Freig./ Releas.			
		ebmpapst		Zchg.-Nr./ Drawing.-No.:	Ers.f.Zchg./ Replaces:
		ebm-papst St. Georgen GmbH & Co. KG		Dokumenttyp/Type of Document / Teildokument (Blatt/Page) / Index/Index	Format/Size: / Massstab/scale

11/09