LR2050

Continuous level sensor (guided wave radar)

LR0000B-ER34AKSKG/US

For high process temperatures: The temperature at the process connection is decisive. The actual medium temperature may be higher.

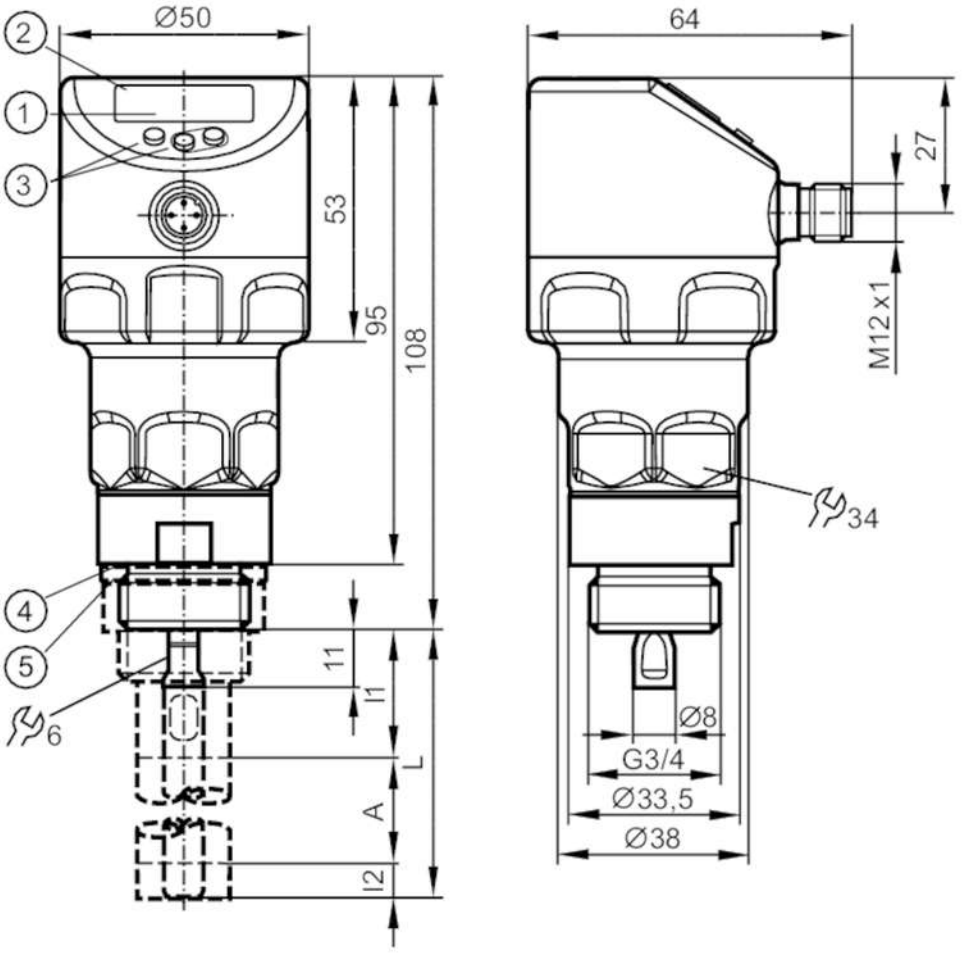

1 alphanumeric display 4-digit
2 LEDs Display unit / switching status
3 programming buttons
4 Sealing
5 additional sealing for use with coaxial pipe
A active range
I1 / I2 inactive ranges

Product characteristics		
Number of inputs and outputs		Number of digital outputs: 1; Number of analogue outputs: 1
Probe length L	[mm]	150...2000
Process connection		threaded connection G 3/4 external thread
Application		
Special feature		Gold-plated contacts
Application		for industrial applications
Media		Liquids
Dielectric constant of the medium		≥ 1,8; (for media with a dielectric constant of 1.8...5 (e.g. oils), a coaxial pipe is needed for operation)
Recommended media		water; hydrous media; oils; oil-based media

LR2050

Continuous level sensor (guided wave radar)

LR0000B-ER34AKSKG/US

Process temperature	[°C]	-20...100; (see note under remarks)	
Pressure rating		16 bar	1.6 MPa
Vacuum resistance		-1000 mbar	-0.1 MPa
MAWP (for applications according to CRN)	[bar]	16	
Electrical data			
Operating voltage	[V]	18...30 DC	
Current consumption	[mA]	< 50	
Protection class		III	
Reverse polarity protection		yes	
Power-on delay time	[s]	< 3	
Measuring principle		guided wave radar	
Inputs / outputs			
Number of inputs and outputs		Number of digital outputs: 1; Number of analogue outputs: 1	
Outputs			
Total number of outputs		2	
Output signal		switching signal; analogue signal; IO-Link	
Electrical design		PNP/NPN	
Number of digital outputs		1	
Output function		normally open / normally closed; (parameterisable)	
Max. voltage drop switching output DC	[V]	2.5	
Permanent current rating of switching output DC	[mA]	150; (200 (...60 °C))	
Number of analogue outputs		1	
Analogue current output	[mA]	4...20, invertible; (scalable)	
Max. load	[Ω]	500	
Short-circuit protection		yes	
Type of short-circuit protection		pulsed	
Overload protection		yes	
Measuring/setting range			
Probe length L	[mm]	150...2000	
Active range A	[mm]	L-40 (L-60); (when set to oil and oil based media)	
Inactive range I1 / I2	[mm]	30 / 10 (30); (when set to oil and oil based media)	
Sampling rate	[Hz]	4	
Setting range			
Set point SP	[mm]	15...L-30	
Note on setpoint SP		when set to oil and oil based media: 35...L-30	
Reset point rP	[mm]	10... L-35	
Note on reset point rP		when set to oil and oil based media: 30...L-35	
In steps of	[mm]	1	
Hysteresis	[mm]	> 5	
Accuracy / deviations			
Measuring error	[mm]	± 7	

LR2050

Continuous level sensor (guided wave radar)

LR0000B-ER34AKSKG/US

Offset error	[mm]	5	
Resolution	[mm]	1	
Zero signal (current)	[mA]	4.0	
Full signal (current)	[mA]	20	
Temperature drift per 10 K		± 0.2 %	
Interfaces			
Communication interface		IO-Link	
Transmission type		COM2 (38,4 kBaud)	
IO-Link revision		1.1	
SDCI standard		IEC 61131-9	
Profiles		Smart Sensor: Process Data Variable; Device Identification, Device Diagnosis	
SIO mode		yes	
Required master port type		A	
Process data analogue		1	
Process data binary		2	
Min. process cycle time	[ms]	2.3	
Supported DeviceIDs		**Type of operation**	**DeviceID**
		default	479
Operating conditions			
Ambient temperature	[°C]	-40...80	
Storage temperature	[°C]	-40...100	
Protection		IP 68; IP 69K	
Tests / approvals			
EMC		DIN EN 61000-6-2	
		DIN EN 61000-6-3	: in a closed metal tank
		DIN EN 61000-6-4	: in plastic or open metal tanks
Shock resistance		DIN EN 60068-2-27	50 g (11 ms) / 20 g (6 ms) with reference rod 0.5 m
Vibration resistance		DIN EN 60068-2-6	20 g (10...2000 Hz) / 1 g (5...200 Hz) with reference rod 0.5 m
MTTF	[years]	216	
Mechanical data			
Weight	[g]	367.4	
Dimensions	[mm]	Ø 50 / L = 119	
Materials		stainless steel (316L/1.4404); PEI; PFA; PBT; FKM	
Materials (wetted parts)		stainless steel (316L/1.4404); stainless steel (316L/1.4435); PTFE; FKM	
Process connection		threaded connection G 3/4 external thread	
Displays / operating elements			
Display		Display unit	3 x LED, green
		switching status	2 x LED, yellow
		level	alphanumeric display, 4-digit
		parameter setting	alphanumeric display, 4-digit
Remarks			
Notes		For high process temperatures: The temperature at the process connection is decisive. The actual medium temperature may be higher.	

LR2050

Continuous level sensor (guided wave radar)

LR0000B-ER34AKSKG/US

Pack quantity	1 pcs.

Electrical connection

Connector: 1 x M12; coding: A; Contacts: gold-plated



Connection

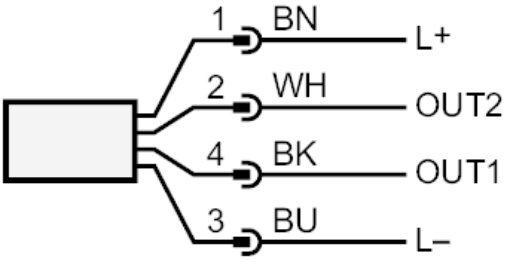

OUT1:	switching output IO-Link
OUT2:	switching output analogue output
	colours to DIN EN 60947-5-2
	Core colours :
BK =	black
BN =	brown
BU =	blue
WH =	white

LR2050

Continuous level sensor (guided wave radar)

LR0000B-ER34AKSKG/US

Diagrams and graphs

Measurement deviation D at the limits of the active rod range

