FLASHING SOUNDERS
BExCS 110-05D | BExDCS 110-05D



Combination devices for visual and acoustic alarms

- Stainless steel protective cage and stainless steel mounting bracket for 360° positioning.
- Extremely intensive light reflection due to 5 joules xenon flash.
- 32 different tones incl. DIN tone, UKOOA/PFEER conformant, 2 externally controllable tones (via plus or minus in DC version).
- Acoustic and visual signal can be controlled separately.
- Synchronised flash frequency (1 Hz) or alternating flash mode in system operation.
- Highly resistant to corrosion and suitable for the toughest environments.
- Adjustable volume (except 12 V DC version).
- Flashing light is insensitive to vibration, impact and shock.

IP 67
protection system

+70 °C
–50 °C
operating temperature

PRODUCT	BEx(D)CS 110-05D sounder				
Rated voltage	230 V	115 V	48 V	24 V	12 V
	AC 50 I 60 Hz		DC		
Operating range	±10 %	±10 %	±25 %	±25 %	±25 %
Nominal current consumption	56 mA	110 mA	130 mA	250 mA	195 mA

PRODUCT	BEx(D)CS 110-05D flashing light				
Rated voltage	230 V	115 V	48 V	24 V	12 V
	AC 50 I 60 Hz		DC		
Operating range	±10 %	±10 %	42–54 V	20–28 V	10–14 V
Nominal current consumption	55 mA	140 mA	180 mA	270 mA	750 mA

PRODUCT		BExCS 110-05D	BExDCS 110-05D
Explosion protection		II 2G Ex d IIB T4 –50 °C ... +70 °C Ta	II 2GD Ex d IIB T4 T100°C
Category (area of use)		2G (Zone 1) 3G (Zone 2)	2G (Zone 1) / 2D (Zone 21) 3G (Zone 2) / 3D (Zone 22)
Certificate of conformity		KEMA 03 ATEX 2545 X	KEMA 01 ATEX 2223 X
Testing body		KEMA	KEMA
Sound pressure level		110 dB(A)	
Sound level reduction		–9 dB	
Flash energy		5 J	
Flash rate		approx. 1 Hz = 60 flashes/min	
Storage temperature		–50 °C ... +70 °C	
Relative humidity		90 %	
Protection system (EN 60529)		IP 66/67	
Duty cycle		100 %	
Service life of the light source		light emission still 70 % after 8,000,000 flashes	
Material	lens	glass	
	housing	die-cast aluminium LM6, similar to RAL 3000 (flame red)	
	horn	ABS self-extinguishing, similar to UL 94 VO & 5VA FR ABS, Ex II 2D anti-static ABS, black	
Connecting terminals		0.5–4.0 mm²	
Cable entry		2 / 1x closed, 1x open (M20), optionally PG13.5 or 1/2" NPT	
Weight	AC	5.0 kg	
	DC	4.8 kg	

TONE TABLE

NO.	DESCRIPTION – BASIC TONE	STAGE 2	STAGE 3
1	Continuous tone	31	11
2 [1]	Alternating tone, UK BS5839-1 (fire alarm, railway crossing)	17	5
3	Slow whoop	2	5
4	Sweeping (fast)	6	5
5	Continuous tone	3	27
6	Sweeping	7	5
7	Sweeping (fast)	10	5
8	Sweeping	2	5
9	Sawtooth, DIN tone 33404-3 Germany (emergency signal), PFEER PTAP	15	2
10	Alternating tone	7	5
11	Interrupted tone	31	1
12	Alternating tone	4	5
13	Interrupted tone	15	5
14	Interrupted tone	4	5
15	Continuous tone	2	5
16	Interrupted tone	18	5
17	Alternating tone, France NFS 32-001 (fire alarm)	2	27
18	Interrupted tone, Sweden SS031711 (air raid warning)	2	5
19	Sweeping, France NFC48-265	2	5
20	Continuous tone, Sweden SS031711 (all-clear signal)	2	5
21	Alternating tone, Sweden SS031711	2	5
22	Interrupted tone	2	5
23	Interrupted tone	6	5
24	Sweeping (medium), UK BS5839-1	29	5
25	Sweeping	29	5
26	Interrupted tone, (fast variable), bell	2	1
27	Continuous tone	26	5
28	Continuous tone	2	5
29	Sweeping (fast), UK BS5839-1	7	5
30	Interrupted tone, Australia AS2220, AS1610, AS1670	32	5
31	Sawtooth, DIN tone 33404-3 Germany (emergency signal)	11	1
32	Slow whoop, Australian evacuation alarm AS2220	26	1

[1] factory setting

The sounder can be set externally to the respective tones of stage 2 & 3. Tone 2 is preset.

ARTICLE NO.	BExCS 110-05D		
Lens colour	230 V AC	115 V AC	24 V DC
●	32074105000	32074155000	32074805000

Article numbers for other colours and voltages on request.

DIMENSIONS

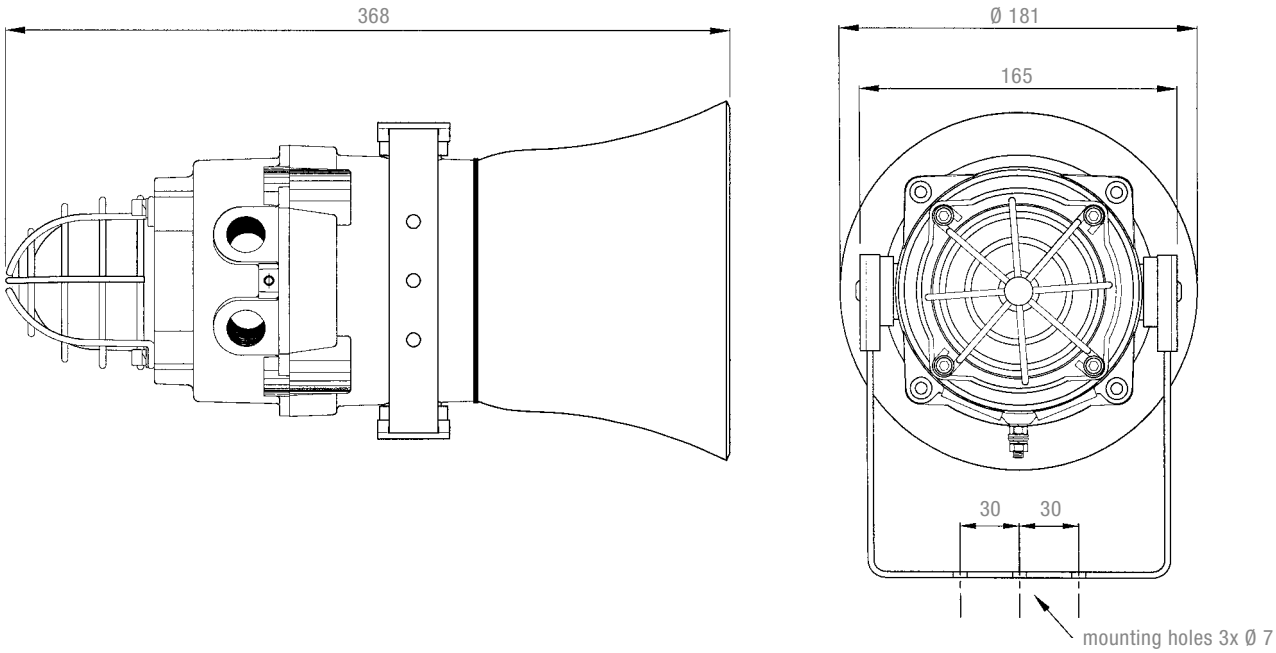

CONNECTION DIAGRAMS

sounder – AC

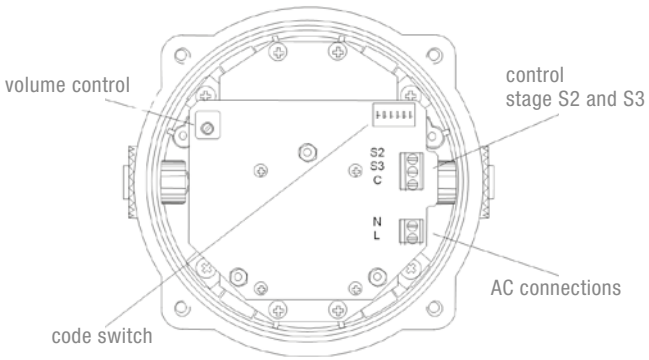

sounder – DC

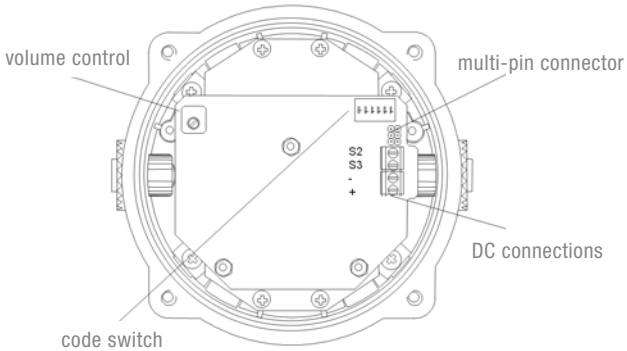

flashing light – AC

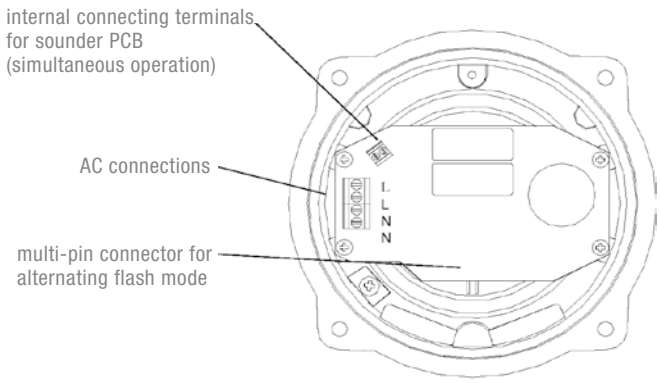

flashing light – DC

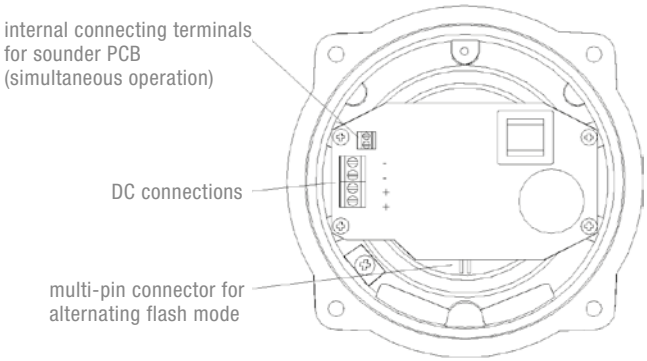

MANUFACTURER'S DECLARATION

We hereby declare that the explosion-protected flashing light with the type designation **BExCS 110-05 D, BExDCS 110-05D** has been developed and manufactured in accordance with section 5.1.2 of EN 50014.

This declaration is based on compliance with the following regulations and standards:

94/9/EG	CE conformity
EN 50014	Electrical equipment for areas at risk of explosions – General requirements
EN 50018	Pressure-resistant encapsulation "d"
EN 50281-1-1	Electrical equipment for use in areas with combustible dust