Enclosed DC Drives

Model 400E **Model 800E** **Model 1200E**



A range of enclosures for professional use.

From 0.5KW to 1.8KW

Features Include:

- Mains On/Off Switch.
- Dual Voltage Supply.
- Set speed potentiometer with graduated scale.







Ratings

Model:	Nominal AC Supply Range	Typical Armature Voltage	Field Voltage	Max Continuous Armature Current	Nominal Power	Dimensions W x H x D (mm)
370 E	110/240v	90/180v	100/210v	3.7 amps	0.55 KW	177 x 250 x 100
400 E				4 amps	0.55 KW	
800 E				8 amps	1.1 KW	
1200 E				12 amps	1.8 KW	

Note:
Units are Factory preset for 240V AC. For use with 110V AC change mains selector jumper on drive unit.

External Fuses:
HRC type minimum 1.5 x Armature Current

SPRINT ELECTRIC
www.sprint-electric.com

Sprint Electric Limited
Peregrine House, Ford Lane, Ford, Arundel
West Sussex, UK, BN18 0DF
+44 (0)1243 558080 info@sprint-electric.com

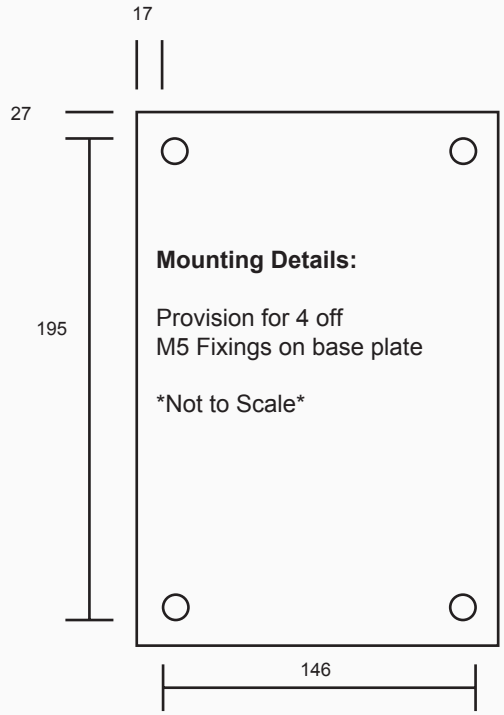

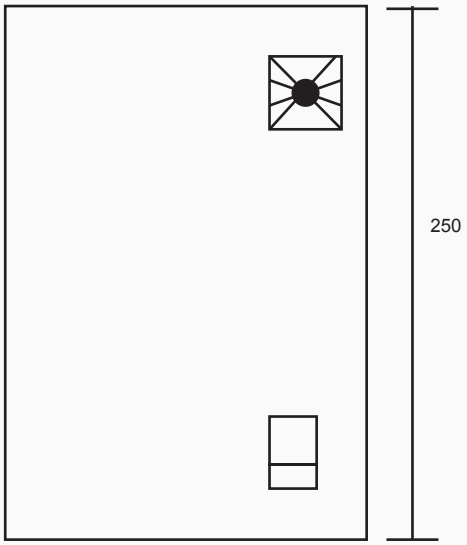

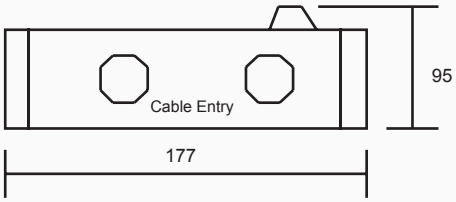

Sprint Electric Limited
Peregrine House, Ford Lane, Ford, Arundel
West Sussex, UK, BN18 0DF
+44 (0)1243 558080 info@sprint-electric.com