KombiSIGN 50 / LED Bulb

LED Bulb 115VAC CL



Part No.: 956.400.67

MECHANICAL DATA	
Height	41 mm
Diameter	29 mm
Materials	PA-GF PC
Housing colour	Black
Weight with packaging	14 g
Product weight	10 g

ELECTRICAL DATA	
Operating voltage	115V
Operating voltage type	AC
Operating voltage frequency	60Hz
Operating voltage tolerance	+/- 10%
Rated operational voltage	115 VAC
Rated operational current	15 mA
Rated inrush current	500 mA

OPTICAL DATA	
Light source	LED
Light colour	White
Optical signal image	Permanent
Service life optical	50,000 h maximum
Lamp fitting/socket	BA15d

APPROVAL DATA	
WEEE	Yes
Conforms with RED directive	No
Conforms with ATEX-directive	No
Conforms with CCC	No
Conforms with FCC	No
Conforms with IC	No
EAC certificate available	No
Conforms with AS-I	No
ICAO Certification	No
Conforms with DNV	No
Conforms with RoHS CN	No

! For additional installation and mounting information, refer to the appropriate user guide at www.werma.com. This printed copy is for information only and is subject to alteration.

KombiSIGN 50 / LED Bulb

LED Bulb 115VAC CL

DRAWING

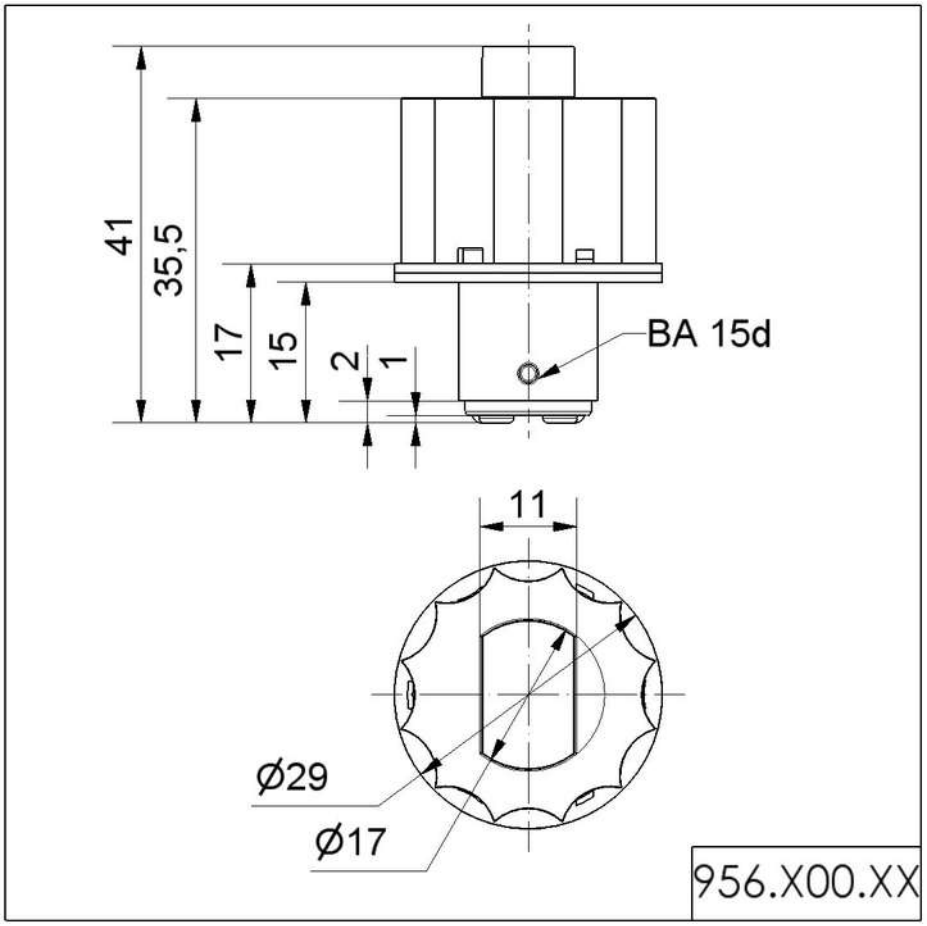

! For additional installation and mounting information, refer to the appropriate user guide at www.werma.com. This printed copy is for information only and is subject to alteration.