8BAC0123.000-1

1 General information

Incremental/SSI encoder interface plug-in module 8BAC0123.000-1 can be used in an ACOPOSmulti slot. The module contains an incremental/SSI encoder interface for encoders with +5 V or +24 V encoder power supply.

The plug-in module is suitable for the following:

- Incremental encoders with RS422 output signals
- SSI encoder (absolute encoder with synchronous serial interface)
- Styli and similar high-speed sensors with digital output

The plug-in module is primarily used to evaluate encoders installed in external motors as well as external axis encoders (i.e. encoders that detect any machine movement).

Information:

Only incremental encoders with square wave signals phase-shifted electrically by 90° can be evaluated. Evaluation of incremental encoders with sine/cosine output or pulse direction outputs is not possible!

B&R recommends the use of encoders with RS422 signals and +5 V encoder power supply. These provide maximum immunity at lower power consumption and are best suited for high counter frequencies.

When used for tracer pins, the module is only used as a high-speed trigger input. Unlike trigger inputs on the ACOPOSmulti inverter and power supply modules, sensors with an RS422 output can be connected here. The necessary auxiliary inputs for tracer pins with infrared transfer are also available.

The plug-in module offers a connection option for a motor temperature sensor (T+, T-) to integrate third-party motors without problems. [1)]

During startup, the plug-in module is automatically identified by the ACOPOSmulti drive system's operating system. Making automatic adjustments to the motor (resolution parameter) and reading the motor parameters and limit values is not possible because incremental and SSI encoders do not have parameter memory like the EnDat encoder.

In incremental encoder operation, all 4 edges are always evaluated; the counter frequency is therefore 4x the input frequency.

This module is equipped with a configurable digital input filter. In this way, the filter effect and edge interval monitoring can be adjusted in 4 steps according to the maximum frequency required by the application. The lowest maximum frequency is set by default!

1) **ACOPOSmulti plug-in module in SLOT1:**
The temperature sensor connections (T+, T-) on the ACOPOSmulti plug-in module can be evaluated for all ACOPOSmulti power supply and inverter modules.

ACOPOSmulti plug-in module in SLOT2:
The temperature sensor connections (T+, T-) on the ACOPOSmulti plug-in module can only be evaluated for ACOPOSmulti 2-axis inverter modules (8BVIxxxxHxD0.000-1).

2 Order data

Model number	Short description	Figure
	Plug-in modules	
8BAC0123.000-1	ACOPOSmulti plug-in module, incremental encoder and SSI absolute encoder interface for RS422 signals	

Table 1: 8BAC0123.000-1 - Order data

3 Technical data

Model number	8BAC0123.000-1
General information	
Module type	ACOPOSmulti plug-in module
B&R ID code	0xA37D
Slot [1]	Slots 1 and 2
Max. power consumption	
Encoder power supply 5 V	P_{Module} [mW] = 25 V * (($I_{Encoder}$ [mA] * 0.42) + 0.45) [2]
Encoder power supply 24 V	P_{Module} [mW] = 25 V * ($I_{Encoder}$ [mA] + 0.45) [3]
Certifications	
CE	Yes
KC	Yes
UL	cULus E225616 Power conversion equipment
Encoder connection [4]	
Module-side connection	15-pin male DSUB connector
Status indicators	UP/DN LEDs
Electrical isolation	
Encoder - ACOPOSmulti	Yes
Encoder monitoring	Yes
Max. encoder cable length	100 m
Encoder power supply 5 V	
Output voltage	5 V ±5%
Load capacity	350 mA [5]
Sense lines	
Quantity	2
Max. compensation	2x 1.5 V
Protective measures	
Overload protection	Yes
Short circuit protection	Yes
Encoder power supply 24 V	
Output voltage	24 V ±10%
Load capacity	300 mA [6]
Sense lines	No
Protective measures	
Overload protection	Yes
Short circuit protection	Yes
Inputs A, B, R, D	
Signal transmission	RS422
Differential voltage	±0.5 V to ±7 V [7]
Common-mode voltage	-10 to +13 V
Terminating resistor	120 Ω (difference)
Incremental encoder operation	
Signal form	Square wave pulse
Evaluation	4x
Input frequency [8]	Max. 50 / 100 / 200 / 400 kHz
Counter frequency	Max. 200 / 400 / 800 / 1600 kHz
Reference frequency	Max. 50 / 100 / 200 / 400 kHz
Distance between edges [9]	Min. 1.3 / 0.7 / 0.4 / 0.2 µs

Table 2: 8BAC0123.000-1 - Technical data

Model number	8BAC0123.000-1
SSI absolute encoder operation	
Keying	Gray, binary
Baud rate	390 kbaud
Word size	Max. 31-bit
Differential voltage	Typ. 2.5 V
Environmental conditions	
Temperature	
Operation	
Nominal	5 to 40°C
Maximum	55°C
Storage	-25 to 55°C
Transport	-25 to 70°C
Relative humidity	
Operation	5 to 85%
Storage	5 to 95%
Transport	Max. 95% at 40°C

Table 2: 8BAC0123.000-1 - Technical data

1) The 8BAC0123.000-1 is an encoder module. Two encoder modules can also be connected. In this case, the encoder module in the first slot automatically serves as motor feedback for the first axis; the encoder module in the second slot serves as motor feedback for the second axis. In 1-axis mode, the second slot can be used for other purposes.
2) $I_{Encoder}$ ... Current consumption of the incremental encoder. The current consumption of the terminating resistors is already taken into account in the formula. A voltage drop on the encoder cable of max. 2x 1.5 V is also taken into consideration.
3) $I_{Encoder}$ ... Current consumption of the incremental encoder. The current consumption of the terminating resistors is already taken into account in the formula.
4) The encoder must be wired using a single shielded cable with twisted pair signal lines (e.g. 4x 2x 0.14 mm² + 2x 0.5 mm²).
5) An additional reserve of 60 mA is available for terminating resistors.
6) An additional reserve of 25 mA is available for terminating resistors.
7) With open circuit monitoring disabled, ±0.2 V is sufficient.
8) Input filter configurable with software.
9) Automatically adjusted to the selected input filter.

4 Wiring

4.1 Pinout

Figure	X11	Pin	Description	Function in incremental mode	Function in SSI mode
	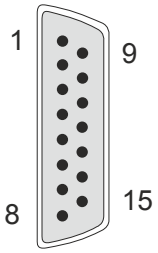	1	A	Channel A	---
		2	A\	Channel A inverted	---
		3	B	Channel B	---
		4	B\	Channel B inverted	---
		5	RD	Reference pulse	Data input
		6	RD\	Reference pulse inverted	Data input inverted
		7	T	---	Clock output
		8	T\	---	Clock output inverted
		9	+5 V Out	Encoder power supply +5 V	
		10	Sense +5 V	Sense input +5 V	
		11	Sense COM	Sense input 0 V	
		12	COM (1 - 9, 13)	Encoder power supply 0 V	
		13	+24 V Out	Encoder power supply +24 V	
		14	T+	Temperature sensor +	
		15	T-	Temperature sensor -	

Table 3: Incremental/SSI encoder interface 8BAC0123.000-1 - Pinout

Danger!

The connections for the motor temperature sensor and encoder are safely isolated circuits. These connections are therefore only permitted to be connected to devices or components that have sufficient isolation per IEC 60364-4-41 or EN 61800-5-1.

Caution!

This plug-in module uses the same type of connection as EnDat 2.1 plug-in module 8BAC0120.000-1 (15-pin DSUB connector).

There is a possibility of confusion! EnDat 2.1 encoders will become irreparably damaged if connected to this plug-in module!

Warning!

Temperature sensors are only permitted to be connected to T+ and T- on an ACOPOSmulti plug-in module under the following conditions:

- **The ACOPOSmulti plug-in module is connected in SLOT1 of an ACOPOSmulti module and no temperature sensor is connected to connectors X4A/T+ and X4A/T- of this ACOPOSmulti module.**
- **Only for 8BVIxxxxHxD0.xxx-x inverter modules:**
  The ACOPOSmulti plug-in module is connected in SLOT2 of an ACOPOSmulti module and no temperature sensor is connected to connectors X4B/T+ and X4B/T- of this ACOPOSmulti module.

Otherwise, the temperature monitoring functions on the ACOPOSmulti module may become ineffective, which in extreme cases can cause the hardware (e.g. motors) connected to the ACOPOSmulti module to be destroyed!

4.2 Input/Output circuit diagram

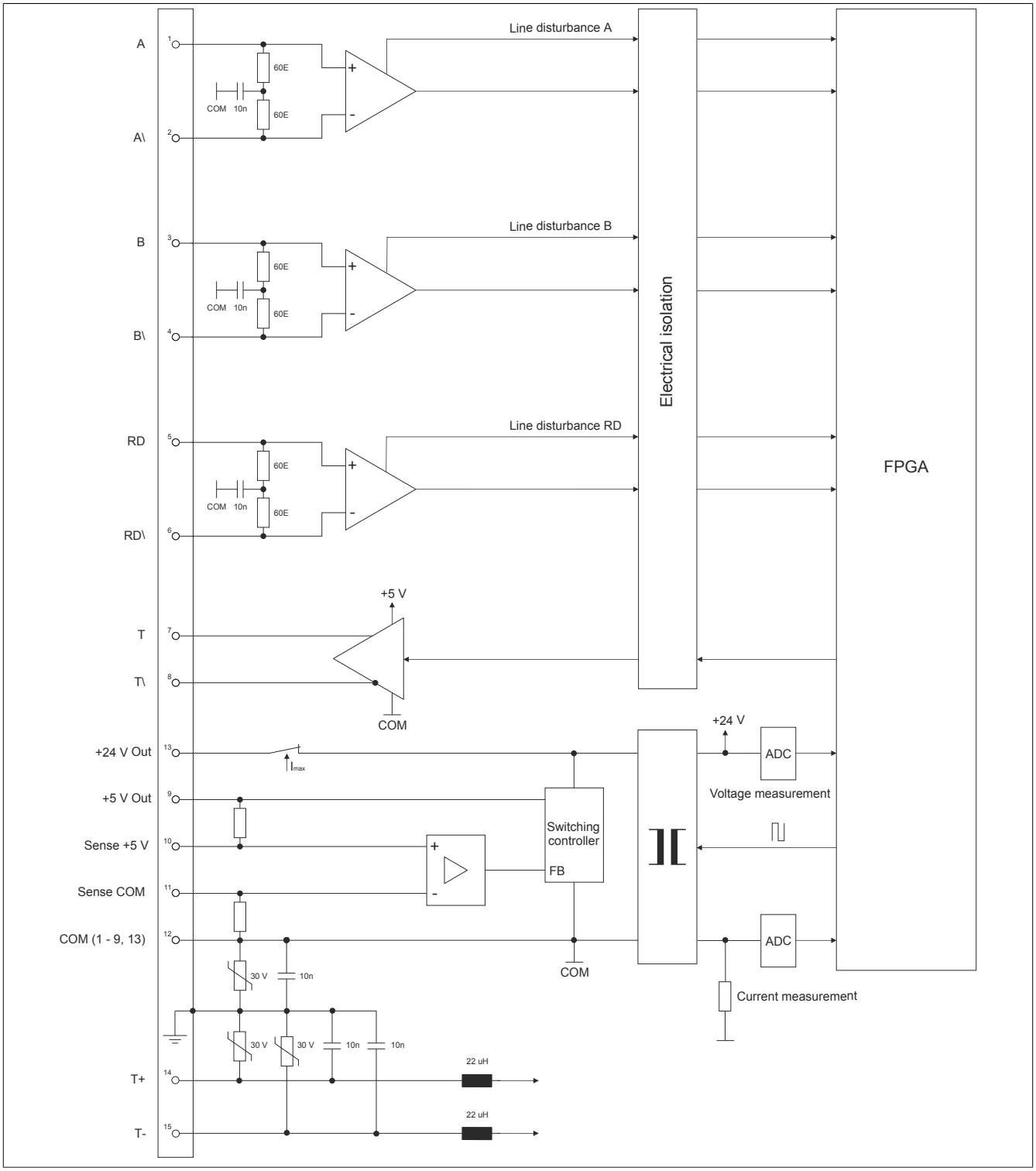

Figure 1: Incremental/SSI encoder interface 8BAC0123.000-1 - Input/Output circuit diagram

4.3 Connecting styli (in preparation)

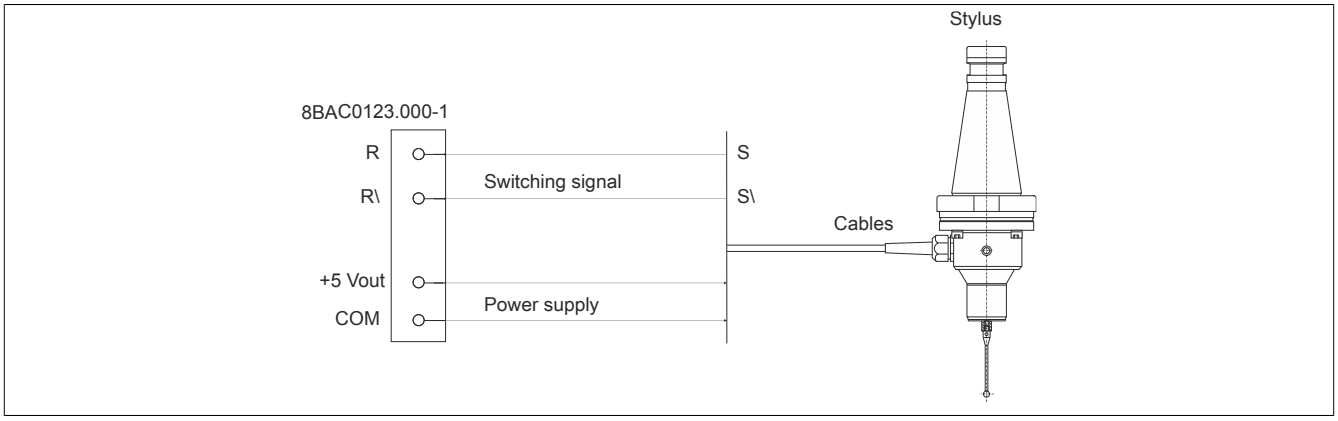

Figure 2: Connection example for cabled styli with 5 V power supply and TTL output signals

The reference pulse input is used as an input for the switching signal for the tracer pins. Open circuit monitoring for channels A and B must be deactivated.

5 Status indicators

The indicators (LEDs UP/DN) are located on the front of the ACOPOSmulti drive or power supply module where the plug-in module is installed.

The UP/DN LEDs are lit depending on the rotational direction and the speed of the connected encoder. [2)]

UP LED ... indicates when the encoder position changes in the positive direction.
DN LED ... indicates when the encoder position changes in the negative direction.

6 Firmware

The firmware is part of the operating system for the ACOPOSmulti drive system. Firmware is updated by updating the ACOPOSmulti operating system.

[2)] The count direction of the encoder can be configured in Automation Studio. Changing the counting direction in Automation Studio does not change the actual counting direction of the encoder, however, and therefore has no effect on the UP/DN LEDs!