PRODUCT DETAILS

ARTICLE: 37559

WHEEL ZS 125X40/50 BB FIXED E70



Wheel series ZS

Castiron wheels with soft blue polurethane coating 87 Sh.A; available with shielded precision ball bearings.
Wheel fitted with ball bearings.

Castor series E70

Extra heavy duty fork assemblies fabricated from heavy gauge sheet steel; swivelling with a thrust and taper roller bearings. Finish: blue paint.

Technical data

Wheel diameter	D	125 mm
Tyre width	E	40,0 mm
Bearing seat diameter	s	47 mm
Bore diameter	d	20 mm
Outer faces bearings distance	V	44 mm
Weight article		3,190 kg
Hub width	L	50 mm
Overall height	H	172 mm
Top plate outer dimensions	AxB	135x110 mm
Bolt hole spacing	axb	96x56 mm
Bolt hole spacing	axb	105x75 mm
Bolt hole spacing	axb	105x80 mm
Fixing bolt diameter	g	M10
Fork width	U	50 mm
Load Capacity		400 kg

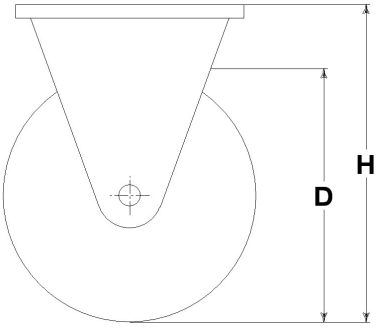

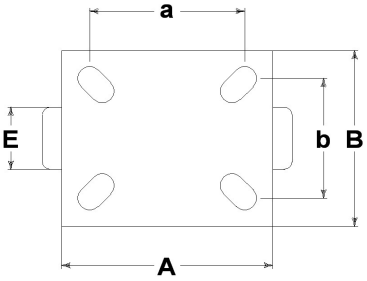

Related Articles

Spare part wheel: 37010CC
Version with footguard: 37559PP

GENERAL INFORMATION / RECOMMENDATIONS AND WARNINGS
The cited text and the complete catalogue in their most up-dated versions are available in the OEM's website page www.lagspa.it/downloads. The dimensions, descriptions, specifications and illustrations herein are indicative and subject to variations without notice. The fact that products are illustrated herein does not necessarily imply they are available from stock nor does it place us under any obligation to supply them.
Tests carried out refer to the original products with original accessories: the replacement of one of the components with others of different manufacture might prevent the same results from being achieved and will automatically invalidate any guarantee. Please contact our technical service concerning any special application.